Electrophysiological correlates of complex attentional selection

Dissertation

zur Erlangung des Doktorgrades

des Fachbereichs Humanwissenschaften

der Universität Osnabrück

vorgelegt

von

Benjamin Joachim Schöne

aus

Münster

(Geburtsort)

Osnabrück, 2018

Table of contents

General Abstract 6

1. Introduction 8

1.1 The Great Filter 8

1.2 Perception - Ceci n'est pas une pipe 12

1.3 Modalities of attention 15

1.4 Attentional superiority and attentional capture 16

1.4.1 Study 1 - Attention as evolutionary advantage or 'How I met your mother' 16

1.4.2 Study 2 - Frontal alpha asymmetries as a marker striatal reward modulation 23

1.4.3 Study 3 - Personal semantic knowledge guiding attention 27

1.4.4 Study 4 - Executive Control in Attention - Insights from Mindfulness 32

1.5 Summary and outlook 37

2. Publications 39

3. General discussion 138

3.1. Summarized results 138

3.2. Aim of the general discussion 140

3.3 Mapping the new data on Cowan's framework 142

3.3.1 Studies 1 and 2 142

3.3.2 Study 3 143

3.3.3 Study 4 144

3.4 An updated framework 145

3.4.1 The central executive as network properties 147

3.4.2 A functional approach 148

3.4.3 Brief sensory store 149

3.4.4 Topologies of memory networks 151

3.4.4.1 Disturbance in the force 151

3.4.4.2 Cohesive networks 152

3.4.5 Memory reactivity 153

3.4.6 The attentional focus 154

3.5. Further approaches arising from the model of complex attentional selection 156

3.5.1 Automatic and volition attentional processes 156

3.5.2 Permeability of the attentional focus 157

3.5.3 The model and the negativity bias 159

3.5.4 Long-term memory guiding attention – a broader picture 160

3.6. Future directions for meditation research 161

3.6.1 Meditation and expert networks 162

3.6.2 Attention and Affect 163

3.7 Thoughts on volition and the central executive 167

3.8 Concluding remarks 170

4. References 172

5. Erklärung über die Eigenständigkeit der erbrachten Leistung

"*Every act of creation is first an act of destruction.*"
–Pablo Picasso

Acknowledgments

I would like to express my sincere gratitude to my advisor Prof. Dr. Thomas Gruber for his continuous support of my research, for his motivation, immense knowledge, and patience. My sincere thanks also go to my fellow labmates for the enlightening discussions, sleepless nights in the laboratory and all the fun we have had in the last years.

General Abstract

Attention is one of the pivotal research subjects in psychological science. Its major function is to select relevant information from the sensory streams and suppress distracting information. As the capacity of the brain is limited, a task-oriented selection of input is a crucial feature of cognition, promoting efficient behavior. Early approaches of attentional systems thus focused on this to a high degree passive perceptual filtering aspect of attention. Most influential is for example Broadbent's model (1958), assuming that relevant information is filtered out during early stages of the sensory stream, while ignored information is completely lost. This theory was quickly complemented by Deutsch and Deutsch (1963) with a mechanism for late selection, showing that information can be semantically processed without awareness and later selected according to situational demands. As a hybrid model of early and late selection, Lavie's load theory (1994) addressed two main questions arising from the initial approaches: At which stage of the sensory stream does selection occur and to which extent is ignored information processed. Lavie concluded that under high information load, irrelevant information is suppressed at early stages, whereas under low load, when the brain's capacity is not exhausted, it is processed in depth. Although widely accepted and believed to correspond to the functional properties of cognitive processes, even load-dependent theories do not account for all kinds of attentional phenomena. Especially the complex interactions of affect, memory as well as executive functions, which constitute the variety of attentional processes, make it difficult to develop an integrative framework of attention. This is particularly the case since conventional approaches to attention still seem to be under the intermediate immersion of the attention solely as a perceptual filter.

Inspired by more holistic and integrative approaches by Nelson Cowan and Eric Kandel, who regard attention as a constructive, even creative process this dissertation aims to illuminate the phenomenon of attention from several perspectives. The purpose is to gain insights, which go beyond the results obtained by conventional or so to say conservative

paradigms. Four electrophysiological studies are applied to investigate attentional mechanisms and structure along the visual information stream.

Study 1 investigates the electrophysiological correlates (ERPs) of automatic allocation gain, reflected by the P1 component, in response to highly salient stimuli, making a case for motivational relevance in attentional processing. Study 2 takes a closer look at said gain processes, investigating frontal alpha asymmetries, which index modulation of striatal reward encoding. Further top-down modulations are the research subject of Study 3, which puts declarative memory into focus. Specifically, the effects of functional network properties of long-term memory encoding self-relevant information on attentional gain mechanism are investigated. As a result, self-referential processing is based on automatic retrieval of personal information as opposed to the processing of unknown persons, which requires voluntary, that is, strategic, attention-demanding processing as indexed by the N170 and the N400 component, respectively. Study 4 investigated the neural efficiency gains related to meditation practice combining multiple object tracking with steady-state visually evoked potentials. The results shed new light on the interaction of attentional focus and visual short-term memory, showing that enhanced distractor resistance profits from attentional de-automatization, thereby increasing capacity limits of visual short-term memory.

In the general discussion of this thesis, Cowan's integrated framework of attention provides a reference for evaluating and relating the results in s structured manner in order to overcome the limitations of the perceptual filter approach. An updated version of Cowan’s framework is furthermore proposed, incorporating the new empirical data. Last but not least, new questions, concepts and predictions arising from the model are discussed.

1. Introduction

1.1 The Great Filter

It seems like an imperative to start a dissertation about attention with the famous quote by William James[1][1], stating that everybody already knows what attention is. Following this quote, I should say that his pioneer work is inspirational and to a large degree surprisingly accurate given the methods of his time. Nevertheless, significant world changing and earth-shattering progress has been made in the field of attentional research. I will not start with this quote. First of all, the topic of attention would become increasingly boring with every page. Attention itself seems at first glance not very interesting at all. Everybody thinks he/she already knows what attention means and expect that anything else you might learn is repetitive. Furthermore, the concept of attention does not seem to be very complex. Take a look, don't take a look. Look left, look right. That's it. It is due to this "Jameson wisdom" that this dissertation does not fully comply with the orthodoxy of scientific writing style. This holds at least for the style of the general introduction and discussion, and obviously not for the (peer-reviewed) publications constituting this dissertation as well as the general scientific claim. The deviation in style is furthermore applied due to the admittedly unconventional study designs. Although they meet the most demanding scientific requirements, they do not conform to the paradigms normally applied in this area of research. The studies employ erotic pictures, meditation practice and pictures of the participants themselves (the first and last are not confounded). They are designed to illuminate the phenomenon of selective attention from several perspectives using some very different methods. The purpose is to gain insights, which go beyond the results obtained with conventional or so to say conservative paradigms. Presenting participants with arrows and squares, like Posner did, is a good method to

[1] „Everyone knows what attention is. It is the taking possession by the mind, in clear and vivid form, of one out of what seem several simultaneously possible objects or trains of thought. Focalization, concentration, of consciousness are of its essence. It implies withdrawal from some things in order to deal effectively with others, and is a condition which has a real opposite in the confused, dazed, scatterbrained state which in French is called distraction, and Zerstreutheit in German."

investigate selective spatial attention, but is also very delimited and ignores the multifaceted nature of attentional processes. Attention is a multimodal, domain unspecific collective term for various associated cognitive and emotional functions and cannot be regarded as an isolated function. The second reason why James' quote might not be a good starting point is that I personally think it is plain wrong.

Actually, we do not know what attention is, neither can we fully grasp its dimension. It is surprisingly easy to create a model of various interaction between psychological processes and mechanisms; to draw a box with the caption "attention" with arrows pointing to other processes and mechanisms, systems and subsystem of the brain with its cortical and subcortical structures [1]. Is this attention? A functional property of the brain, represented by a colored box on the sheet of paper, defined by its interweaving with other functions? Can we reduce attention to selecting relevant information from available sensory input while suppressing distractors? If you compared it to a computer function, attention would be an algorithm fulfilling a specific task. [2]. Algorithms are modular; they have an input and an output variable. They are to a high degree interchangeable and can be called by various functions. Does that also hold for human attentional processes? In my opinion, and from a more philosophical standpoint, attention is much more than an input-output relating function. Attention reveals our deepest and sometimes even unconscious desires (Study 1 & 2), it guards us against the evil threatening of the coherence of our very self (Study 3), and it is the silver bullet showing who we are among the crusty layer of emotions and reactions - the de-automatized self (Study 4). Attention is our companion; it is not something used by the brain, it is what we are, and at the same time it is our creator. It filters the sensory input stream according to our biological and psychological needs; it creates sense where otherwise chaos

would reign. In other words, attention, under use of various types of memory is a constructive process[2].

This notion of attention has emancipated from a technical understanding mostly based on Broadbent's filter model in 1958 [3]. The rationale of his model lays in the overwhelming amount of sensory input overloading the cognitive systems and thus has to be filtered out at certain stages of the sensory stream - to a great extent this takes place early on the basis of physical attributes. The limited capacity of the brain would further dictate that unattended formation is mostly lost and is not subject to deeper, for example, semantic, processing. Broadbent's early selection approach was quickly relativized in favor of models also incorporating late selection mechanisms (Deutsch & Deutsch, 1963 [4]) assuming that information is processed in-depth and called whenever the situation requires it.

Lavie's load theory represents a hybrid model of early and late selection [5] and addressed two of the main questions arising from the early/late concept: (1) At which stage in the sensory information stream does attention select information? (2). To what extent are unattended stimuli processed? [6]

Under high-load conditions, when processing relevant information acquires all available resources, irrelevant information is neglected at early stages and excluded from further processing. Conversely, when not all available resources are exhausted, even irrelevant stimuli are subject to semantic processing. What sounds plausible on the surface, however, has been challenged by alternative concepts of "perceptual load" [for review 6]. Instead of tracing reduced distractor interference back to load, dilution by the presence of

[2] A view expressed by Nobel laureate Eric Kandel who says "*Recall of memory is a creative process. What the brain stores is... only a core memory. Upon recall, this memory is then elaborated upon and reconstructed, with subtractions, additions, elaborations, and distortions*.", or "*Each sensory system first analyzes and deconstructs, then restructures the raw, incoming information to its own built-in connections and rules—shades of Immanuel Kant."*

Kandel, E. R. (2007). In search of memory: The emergence of a new science of mind. WW Norton & Company.

neutral items could account for late selection. Furthermore, perceptual load manipulations are confounded with memory load manipulations as visual search actually is a working-memory task. Hence, feature con- and disjunction interferes with memory demands, while perceptual demands are held constant, distorting the experimental results.

The idea that visual search is a working-memory task has been previously brought up by Cowan in 1958 [7]. As elaborated in the following paragraph and following Kandel's quote mentioned above, attention cannot be directed outwards; it deals with preprocessed and constructed mental objects. Visual attention is not like a camera focused on point within a scene, but on representations, which are constructed in dependence on existing memory. Given the year it was introduced, Cowan's model seems to be outdated, but against the background of contemporary theories about the interplay of attention and memory, it is surprisingly up-to-date.

These early and late selection frameworks were inspired by the ongoing and upcoming technical computer revolution [7]. Among other parts, computers have simple input and output channels, a hard drive, temporary, volatile memory (RAM) opposed to a long-term hard-drive memory, and a processing unit - components which are strangely familiar as they seem to correspond to components of the human mind. Information can be attended or unattended - zero or one. This is binary totalitarianism or like Joseph Campbell phrased it: "*Computers are like Old Testament gods; lots of rules and no mercy*"*[3] [8]. This similarity even spanned philosophical analogies of the brain as hardware and the mind as software[4]. Both have proven to be too simplistic, as the brain is not a collection of single parts but highly complex with itself intertwined system, whose structures and connections define its functional properties - or "software"- and not logically connected boxes or processing units. Mutually

[3] It should be noted that I only do know this quote because I excessively played the computer game Civilization V.
[4] On the analogy between brain and mind as computer and software see McCrone, J. (1990). *The Ape that Spoke: Language and the evolution of the human mind.* William Morrow & Co.

enriching each other, computer science, psychology and science fiction have come to the new, aforementioned dogma of attention - the mind or specifically attention as a process of creation. "*What is real?*", Morpheus asks in the movie „Matrix," „"*How do you define 'real'? If you're talking about what you can feel, what you can smell, what you can taste and see, then 'real' is simply electrical signals interpreted by your brain.*" Taking up the thought that attention is not a box or a process, the new empirical data is mapped onto Cowan's integrated framework of memory and attention, which provides a reference for a systematic evaluation. In the next step, Cowan's framework is updated, given the new insights on attentional processing. Specifically, the concept that the type of memory (e.g., short- or long-term memory) is not defined by the system to which it belongs, but by the state in which it is in, is revisited and extended accordingly to the studies, which underlie this dissertation (c.f. general discussion). Implication, predictions and questions arising from the new model are discussed in the last section.

1.2 Perception - Ceci n'est pas une pipe

Before addressing visual attention further, we need to put its working domain, namely visual perception, into context. Where does visual perception start?

In the beginning, there was light it says in the Bible[5]. It is kind of the Bible's first flaw, but certainly not its last. Actually, in the beginning, there is transduction - the transformation of light into electric energy in the retina. Here, the creation of the universe as we perceive it begins. The point where the "particles" of the universe vanish and start to form a mental representation of the outer world is our mind. Strictly speaking, the commonly used word "mental representation" is vague and misleading. The brain, starting with the retinae, does not

[5] (3), And God said, "Let there be light," and there was light. (4) God saw that the light was good, and he separated the light from the darkness. (5) God called the light "day," and the darkness he called "night." And there was evening, and there was morning—the first day. (Genesis 1,3-5)

pass information from the outer world to the central nervous system; it extracts information, analyzes and interprets them. The outer world, which is captured in whole by our sensory system and then *projected* into our mind, where projection is subject to earlier extraction, analyzation, and interpretation. There is no outer world, which is captured in whole by our sensory system and then projected into our mind. The objects we deal with are no physical objects; they are mental objects created by our brain, or how Rene Magritte would say it: "Ceci n'est pas une pipe" (Translation: This is not a pipe.). In his most famous painting, titled "La trahison des images" (1929, Translation: The treachery of images) this sentence is written under the illustration of a pipe. Foucault pushed this even further with a second picture that is part of his series "Aubes à l'Antipode" (1966, Translation: Dawn on the other side of the world), where the same pipe is placed above a framed picture of a large pipe. The second picture has the same handwritten title and is supposed to be an imagery of the pipe above. This work of art illustrates that there is no direct relation between the depicted pipe and the term which is used to denote the object. Likewise, mental objects have only little to do with their physical counterpart.

The outside of our mind - to physicist - is an empty void [9]. There is space, energy, and matter, although technically speaking matter is just a form energy. Atoms make up molecules which reflect light bouncing into our retinae. Atoms themselves mainly consist of space; 99.99999999% is space and atoms only make up 4% of the outer universe[6]. The remaining 96% of the universe is dark matter and dark energy, floating around merely interacting with the rest of the universe [10]- if they exist at all. Everything we see relies on light emitted or reflected by something which mainly consists of space and only makes up a fraction of the outer universe. The light waves we are able to perceive, that is, the light wave to which our rod and cones are sensitive to is in a range from

[6] To put this into perspective, an atom is a lonely and small a grain of rice put in the center of a soccer field, where the electrons have the distance as the goals.

~ 380nm to ~720nm - which again is only a minor fraction considering the whole spectrum of light [11]. Given restriction of the human eye, this is what Richard Dawkins calls the "Mother of all burkas. "[12] Color perception itself is a good example of the above briefly mentioned extraction and analysis of environmental information. The spectrum as it does not contain information about color or to put it differently – "*For the rays to speak properly are not colored*.", As Newton phrased it [13]. Other animals, of course, see less or more parts of the spectrum. Shortly, but for the sake of impressiveness, the mantis shrimp has 16 types of color-sensitive receptors, whereas the human has only three (S, M, L cones), all with different absorbing peaks in the spectrum. The shrimp is thus believed [7]to see ultraviolet light as well as the polarization of light [14,15]. Humans can take a glimpse of extending their receptor range with the so-called Haidinger's brush-effect [16], which allows perceiving the polarization of light.

The retinofugal projections from the retinae further ascent via the thalamus, that is the lateral geniculate nucleus, to primary visual or striate cortex. From there the information is fed to over 30 other areas along the ventral and dorsal streams, each contributing to other aspects of visual processing [11]. V1 as the first higher cortical area receiving information from subcortical areas is also the first area of which the activity can reliably be recorded with the Electroencephalogram (EEG).

All studies in this dissertation evaluate different EEG signals from different stages of visual processing. Studies 1 and 3 describe rather early stimulus-driven bottom-up attentional gain processes; the P1 ERP component originates in V1 and reflects the automatic allocation of attentional resources. Specifically, it indexes attention effects in visual perception at early stages [17]. The C1, a deflection prior to the P1, is conversely not modulated by attention,

[7] We can only deduce from the behavior what another organism experiences but do not directly observe the phenomenological consciousness, i.e. the sensory experience. Hence, we do know, what another organism actually feels or sees (*cf.* general discussion).

making the P1 the very first indicator for filtering mechanisms. The subsequent components are assumed to mirror higher perceptual and cognitive functions – that is, feature processing, stimulus evaluation, mnemonic processing, and object recognition. The N170 component originates from the fusiform gyri [18] and encodes facial features, but not identity of faces [19]. Conversely, the topic of study 2 and 4 are prefrontal top-down structures modifying attentional processes, namely working memory as executive attention as well as emotions. Attentional gain mechanisms are subject to regulation, both automatic and volitional. Study 2 investigated top-down affect modulation through executive functions, indexed by different levels of alpha wave distributions over homologous frontal sensor sites. Study 4 investigated the de-automatization of automatic attentional capture by distractors through enhancement of executive functions by means of mindfulness training. Study 3 highlight the effects of declarative memory, specifically personal and general semantic knowledge, on attentional gain and subsequent semantic processing. As independent variables, the N170 and N400 are primarily considered as they index attentional processes and access to semantic knowledge, respectively [20].

1.3 Modalities of attention

Attention is one of the most studied issues in cognitive sciences and one of the founding disciplines of modern psychology, together with Sigmund Freud's pioneering work introducing fundamental aspects of personality research - while attributing the struggle to develop an intimate relationship with women to the unconsciously persisting wish to crawl back into mother's womb. While most of Freud's theories have been discarded nowadays, the fundamental concepts and mechanisms of attention still hold, although our understanding of them has been reshaped and refined during the centuries. The scientific relevance of attentional mechanisms can be approximately determined by a Google search. Typing the word "attention" into Google Scholar returns 5.800.000 results. Another fundamental process

of human cognition "memory" returns a little more with 5.860.000 results, which is even more twice as much as the term "emotion" with 2.880.000 results, although this term comprises much more mechanisms (Date of search 02.01.2018).

The above-described (see 1.1) pivotal role of attentional processes is not only of philosophical nature. Insights into attention have paved the way for an unpreceded understanding of the interplay of human cognition, fostering improved treatment of attentional disorders, such as ADHD, or refine educational methods[8]. The probably most recent discussion on attention deals with the question of how smartphones pose a risk to traffic safety as they bind a large amount of resources [16]. The complexity of attentional processes becomes evident when studying for example visuospatial attention from a broader perspective. To adopt that broader perspective, all four studies approach the subject of attention from various angles. In the following, the studies will be briefly introduced.

1.4 Attentional superiority and attentional capture.

1.4.1 Study 1 Attention as evolutionary advantage or 'How I met your mother'

Our brain and therefore among all other psychological processes our attentional mechanisms are a product of evolution. Like opposing thumbs, or further obvious anatomical adaptions conferring significant advantages in the survival of the fittest, optimized attentional processes are crucial when it comes to not dying, surviving or mating. The concept that "amorphous" psychological mechanisms are subject to natural selection might seem a strange idea at first, but putting this concept on its psychical feet, it becomes quite obvious. Every physical attribute of the human body underlies evolutionary pressure; An individual that can

[8] For example, Neurofeedback has been successfully applied to treat ADHD: "However, significant academic performance improvements were only detected in the Neurofeedback group. Our findings provide new evidence for the efficacy of Neurofeedback, and contribute to enlarge the range of non-pharmacological ADHD intervention choices.". From Meisel, V., Servera, M., Garcia-Banda, G., Cardo, E., & Moreno, I. (2014). Reprint of "Neurofeedback and standard pharmacological intervention in ADHD: a randomized controlled trial with six-month follow-up". Biological psychology, 95, 116-125.

run faster, has a higher chance to escape a predator and keeps on living and mating. A living and mating organism can pass on the genes, which made him/her the Usain Bolt of the stone age. The descendants, inheriting these genes, have the same advantage over their peer group. The slow runners die out, the Bolts survive. As the muscle in the leg, the brain is an organ, which underlies the same evolutionary selection pressure. According to the rule "*No brain, no pain.*“, the brain is the physical precondition for psychological processes. Hence, more intelligent, more social, more aggressive or more fearful members of a species might have an evolutionary advantage over the others. It is noteworthy, that evolution does not lead to the very best adaptation, it is only comparably better than other ones and there is no imperative that this is an optimal adaption. Photosynthesis is the most occurring chemical process on this planet in a organism, and it is highly inefficient. The human retina is built inside out, which does not seem to be the optimal solution, but it fulfills the requirements [11]. The good feeling, we get when we taste sugar and fat might have been an evolutionary advantage thousands of years ago, but nowadays it has turned out to be a big problem. Pun intended. Individuals who liked to consume as much fat and sugar as possible when both were hard to gather hundreds of years ago, were very well nourished, healthy and lived longer, in turn increasing their chance to pass on their genes (For a complete account of evolutionary psychology see [20,21]).

Long story short, attentional processes follow as well the ancient and archaic roads paved by evolution in the gray time, when our species barely would be considered to be human - and a long time before that. This turgid statement has severe implications for psychological research. As mentioned in the introduction, one of the first ERP components is the P1, peaking at around 100ms after stimulus onset, originating from the extrastriate visual cortex. It serves as an index of automatic allocation of visio-spatial attention [22, 23]. The interesting part about this is the word "automatic". Attention is drawn to objects in the visual stream not necessarily voluntarily, but on the basis of evolutionary memory, determining that this specific information is now important and deserves further cognitive and/or emotional processing (see late selection). However, extrastriate areas are primarily specialized for stimuli's physical attributes, such as color, movement or shape [24] implying that incentives are evaluated on basis of these parameters and not only on a basis of motivational value assessed by the amygdala and subjoined structures (*Figure* 1), after the information has gone

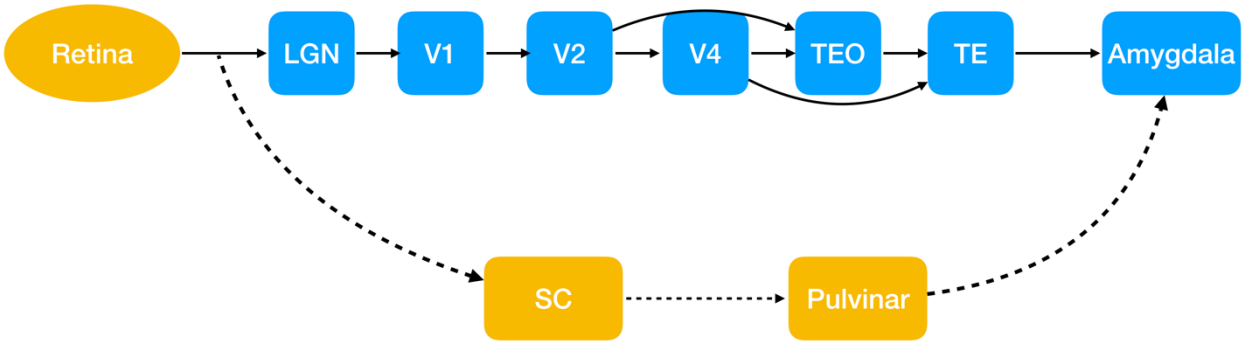

Figure 1: Classical flowchart of visual pathways. The so called "high road" travels through primary visual cortices processing physical attributes of a stimulus, feeding information to the amygdala. Alternatively, the "low road", often associated with "quick and dirty" processing predominantly of affective information goes through superior colliculus and the pulvinar nucleus, providing immediate automatic access to the amygdala.

Adapted from: Pessoa, L., & Adolphs, R. (2010). Emotion processing and the amygdala: from a'low road'to'many roads' of evaluating biological significance. *Nature reviews neuroscience*, *11*(11), 773-783.

up the high road. As a side note, attention guided by *semantic* knowledge is investigated in Study 3, highlighting the complex, interlaced connections among the mnemonic and the attentional system. Study 1 investigated ERPs along one visual information stream, beginning with the P1, followed by the N170, the P3a, and P3b. The classical high- low- road model, as well as more elaborated approaches [6], assume that different aspects, of visual information, such as physical or affective attributes, are processed separately along many pathways simultaneously, as well as with temporal dispersion. That being said, this thesis will nevertheless mainly focus on the P1 component for the following reasons. Most importantly, the amygdala enhances sensory processing early in visual cortex indirectly via the prefrontal cortex. Said top-down modulation, originating in presumably in frontal areas, is the research subject in Study 2. Furthermore, differential effects of valence, arousal and specifically erotic stimuli on attention have already been investigated by means of later ERPs. Although Study 1 adds new scientific insights to which degree these components reflect motivational aspects of visual stimulus processes, the most important scientific contribution is provided by analysis and interpretation of the P1 component.

The initial attentional gain, proportionally indexed by the P1 amplitude, marks the competition for limited cognitive resources between different stimuli [25]. Prior to Study 1 the P1 was believed to exhibit a negativity attentional bias, that is, it is amplified for stimuli (most studies used pictures) with a negative valence [26]. From an evolutionary perspective, it is critical that potential threats automatically capture more attention in order to trigger either fight or flight behavior - whichever action increases the chance of survival and consequently guarantees the passing on of genes. However, this approach ignores two of the four F's in evolutionary psychology: Fighting, Fleeing, Feeding, and Mating [27]. Averting an injury or death is as much crucial for passing on your genes as seizing an opportunity to increase the level of fitness - or to reproduce directly. With this broader picture in mind, it seems imperative that attention is likewise captured by environmental incentives. Indeed, an

extensive compendium of research on high-approach motivation by Gabel and Harmon-Jones has demonstrated that stimuli of high caloric food serve as a catalyst for various emotional, motivational and cognitive processes [28, see also 29].

As interesting and equally trivial this may seem, there is a problem with using pictures of food as stimuli. They are pictures. Undoubtedly, they might elicit approach motivation, but they only serve as a *reminder* of something desirable. The picture itself has no intrinsic motivational value. Before the disintegration of the gold standard and the final delinking of money from gold, the value of every piece of paper was its promise of real gold. Likewise, paper money was desirable but had no natural value. To overcome these limitations, we used erotic pictures. At first, this might sound like old wine in new bottles, but on deeper consideration, there is a profound difference between pictures of naked women and pictures of an (American) apple pie. An erotic picture actually does have a value, erotic pictures are collected, traded, and people pay for them. There is no such site on the Internet named CornHub. The attraction to erotic material is deeply rooted within the human or so to say primate mind, as even monkeys pay with juice in exchange for a look at sexual stimuli of their fellows[9]. Erotic stimuli are another category of stimulus material, much more reflecting real-world cognition (Some say the next step to increase ecological validity of psychological research is virtual reality, e.g. [30]).

Yet, most research, especially in the United States, has focused on negative stimuli in general and in particular neglected erotic stimuli for a very simple reason, eloquently illustrated by Game of Thrones / A Song of Ice And Fire author George R.R. Martin: "I *can describe an axe entering a human skull in great explicit detail and no one will blink twice at*

[9] "Male rhesus macaques sacrificed fluid for the opportunity to view female perinea and the faces of high-status monkeys but required fluid overpayment to view the faces of low-status monkeys. Social value was highly consistent across subjects, independent of particular images displayed, and only partially predictive of how long subjects chose to view each image." From Deaner, R. O., Khera, A. V., & Platt, M. L. (2005). Monkeys pay per view: adaptive valuation of social images by rhesus macaques. Current Biology, 15(6), 543-548.

it. I provide a similar description, just as detailed, of a penis entering a vagina, and I get letters about it and people swearing off. To my mind this is kind of frustrating, it's madness. Ultimately, in the history of [the] world, penises entering vaginas have given a lot of people a lot of pleasure; axes entering skulls, well, not so much." [31] Aside from the type of stimulus material used in previous studies that notion of a negativity bias was formed under the impression of intermixed stimulus sets. That often is a randomized order of pictures depicting something neutral or positive among negative ones [e.g., 32]. As a result, negative pictures gain more attention than neutral and positive ones, which in turn do not differ from each other. To put it differently, a body of naked women does not seem that attractive when presented in temporal proximity to a decapitated one. That is not surprising and somehow good news for the most of us. Furthermore, these intermixed stimuli sets neither really correspond to the probability distribution of our current environment, nor to the one in which the mechanisms in question have evolved. It is hard to imagine an environment in which you stumble over a nice landscape, a mutilated body, a goat, and naked women in less than 20 seconds. Hence, these kinds of paradigms seem to be completely unsuitable for the investigation of attentional gain mechanisms in response to motivation eliciting objects and scenes. Our design thus comprised only neutral and positive pictures, which further could be categorized according to their approach value.

Specifically, the reasoning behind our stimulus set was, that along the lines of Gable and Harmon-Jones research, the motivational value of a stimulus is the driving force of the attentional gain mechanism and the associated cognitive and emotional processes [28]. Previous research, in particular, research concerning the "International Affective Picture Systems" (IAPS) has focused mainly on two affective dimensions - valence and arousal [33]. Valence describes how good or bad a person feels upon watching a picture. Arousal describes how arousing a picture is perceived. Pictures high in valence, but low in arousal are for example beautiful landscapes. The negative counterpart could be pollution. Negative and high

arousing pictures are attacking animals, positive and high arousing would be extreme sports or erotic scenes. The rationale behind this categorization is that pictures, which are high in arousal can elicit a tendency to withdrawal from a scene or to approach it - depending on its valence. Concerning the negative dimension, this seems to comply with common behavior, as it is hard to image negative and arousing circumstances, which would scare people, but not elicit the urge to leave the scene immediately. For the sake of completeness, a seminal study by Carver and Harmon-Jones showed that people can also react with approach to negative stimuli when feeling angry [34]. For positive and highly arousing pictures the story is a bit different than for the negative ones. As said before, the IAPS pictures fulfilling these characteristics are extreme sports and erotic scenes. Both types of pictures have the same or very similar ratings. However, upon closer inspection, there is still a fundamental difference between them. Extreme sports pictures are nice to watch - skydiving, bungee-jumping, surfing, free climbing and so on seem to be a thrilling experience - in a positive sense. People like to watch those, but most of us would never do something like this. Those activities require a certain set of skills; most people do not have, and, at least, seems to be dangerous.

In other words, although this type of pictures is high in valence and arousal, they do not elicit approach motivation. Erotic pictures, conversely, come with approach motivation due to the aforementioned hard-wired evolutionary relevance. This is not just playing around with ideas, in advance to our study we created a stimulus set including pictures depicting extreme sports and erotic scenes with the same valence and arousal values, which still significantly differed with respect to a newly introduced motivational rating. We thus were able to investigate the effects of approach motivation on attentional gain mechanisms while controlling for valence and arousal.

As a side note, we used Playboy pictures (made for men) and refrained from using hardcore material depicting intercourse. A prestudy revealed that men were more suited for this kind of paradigm as they exhibit a much stronger and robust signal, which is much less

prone to unexpected deflections. Women tested with an adapted version of the experiment could be divided into three equally large groups. One part actually enjoyed the experiment - like the vast majority of the men did. The other women either made a deeply ashamed impression after the experiment or giggled like teenagers. There might be cultural or sociological reasons for this behavior, maybe it is inherent to women, but this is beyond the scope of our field of our research.

1.4.2 Study 2 - Frontal alpha asymmetries as a marker striatal reward modulation

The attentional gain mechanisms, however, are only one side of the coin. As outlined above, the attentional gain rests on high-approach motivation, and this motivation neither comes from nowhere, nor does it just happen in a vacuum - figuratively speaking. Where there is action, there is also a reaction in the brain, or moderation, or mediation, or moderation of mediation of... it is clear where this is going. In some electrophysiologically measurable way, the very occurrence and impact of high-approach motivation should be evident. Self-reported measurements are a good start, however, they underly the typical flaws of self-reports. Participants might only answer in a way, which they think is socially desirable in public perception. Alternatively, due to lack of self-access to own emotions, they might report wrong levels of valence, arousal or motivation. Conveniently, there is a marker of this mechanism - the frontal alpha asymmetry (FAA). FAAs are the difference score at homologous frontal sensor sites, usually around standard electrodes F3 and F4 [28]. On the one hand, they indicate high-approach motivation, on the other hand, they are related to emotion regulation as well as executive control mechanisms, specifically, attentional control.

The alpha-rhythm (8-13Hz) and alpha-asymmetries have come a long way. The rhythm itself was discovered in the early 20th century by the man who also invented the human EEG - Hans Berger. The functional interpretations of alpha waves as well as of FAAs

have changed over the last years. The alpha rhythm itself is pretty easy to find, as unlike many other oscillations, it can be directly observed during measurement. Alpha waves occur "naturally" during laboratory session, a tired, bored or very relaxed participant exhibits characteristic alpha patterns at posterior sensor sites before the experiment begins. Closing eyes normally lets alpha go through the roof. It is thus not surprising that alpha-band oscillations were thought to reflect some kind of cortical idling mechanism [35], even more as they are inversely related to the bold-oxygen-level-depend-signal (BOLD) [36]. However, without further exogenous stimulation, alpha oscillations vanish as soon as the participant opens his or her eyes or through mental engagement, implicating that alpha also plays a crucial role in top-down processes. A decrease of posterior alpha power (aka alpha activity, μV^2), furthermore, is associated with increased visual-selective demands [37]. Conversely, higher alpha activity is a marker of internal attentional processing [38]. Although being a bit more elderly compared to the research which links alpha to an idle mode, the later finding already points to Klimesch's inhibition-timing hypothesis [39]. As the name states, the hypothesis contains the idea that an increase in alpha is associated with inhibitory control of cortical processes. Inhibitory processes are the most prominent mechanisms of cortical control. The cerebellum's output, for example, is entirely inhibitory, so that excitation often is the inhibition of an inhibitor [11]. The timing aspect of Klimesch's hypothesis refers to the assumption that the direction of amplitude change and of course the time is directly related to the excitation of neuronal populations. Furthermore, alpha waves control the timing of cortical activation through a phase reset. These processes are not locally restricted as alpha waves have been demonstrated to travel from anterior to posterior cortical regions [40], making alpha an essential part of long-range communication.

FAAs were originally associated with a specific type of affect [28, 41]. Positive affect was believed to lead to a relatively decreased alpha at left frontal sensors sites, whereas negative affect is associated with the opposite effect. Harmon-Jones reasoned that affect is confounded

with motivational direction as, for instance, positive affect and approach motivation are positively related [26]. However, as the Emperor points out in a dialogue with Luke Skywalker, despite being negatively valenced, the use of anger can be quite beneficial as it allocates motivational resources: "*The Alliance... will die. As will your friends. Good, I can feel your anger. I am defenseless. Take your weapon. Strike me down with all of your hatred and your journey towards the dark side will be complete!*" [42].

Motivation or motivational intensity, as defined by Harmon-Jones and Gable in a recent review [28], is the amount of energy an organism will expend to approach or withdraw. The underlying idea behind this is when a reward is easy to obtain, the motivational intensity is low as not much effort is needed to achieve satisfaction. In case of the difficulty to obtain a valuable reward being higher, the motivational intensity increases as well. These words are almost a literal reproduction, and this definition seems to be redundant and to a degree circular. Furthermore, the concept of "energy" in a way seems esoteric and vague as it is not further elaborated. There is also nothing really quantifiable in the brain to which this term could refer. However, for the sake of the argument let us see where this could go: Energy could refer to the numbers of cognitive or emotional processes which are dedicated to the processing the motivational relevant object. The only newly arising processes in the face of a motivational relevant object would be the ones dealing with it, for example, assessing its motivational value. Hence, the "energy" used to obtain a reward would be the assessment of the motivational value. That is a circular definition. Absolute numbers obviously do not work, but what about fractions - a concept directly derived from the idea of competition for limited resources [43]. Maybe energy refers to how much neural energy is diverted to the processing of an incentive or already running processes are boosted. For example, more memory or attentional resources are allocated. This sounds, at first, somehow plausible, especially as we talk about attentional processes. As said above, motivational relevant objects lead to an attentional gain. However, the gain is not (linearly) proportional to an object's motivational

value as previously explained. Differences between particular types of motivational stimuli (food vs. erotic pictures) are rather categorical. More neurons could be recruited to process the characteristics of a motivational relevant object, and thus more energy is consumed by the brain. A single neuron cannot fire more; the all or nothing principle states that it fires or not [11], it can only fire more often and exhibit a distinct temporal activation pattern. Hence, activation functions in computational models of network typologies are usually trigonometric functions. However, it seems exaggerated that the motivational intensity is determined by the number of neurons firing. As explained above, it is rather vice versa; a motivational relevant object leads in a bottom-up manner to an attentional gain. At the neural level, this definition of motivational intensity does not seem to work. Energy could also denote the mechanical energy used to obtain a reward or to avoid something unpleasant. However, hiding on a tree to flee from a predator does require one energy burst followed by hours of remaining stationary. Hence, maybe the amount of time an organism is willing to spare is a good indicator for motivational intensity or a product of time and mechanical energy - or calories spent as this also takes neural energy into account.

With every thought, the questions what the term energy denotes gets infinitely more complex. We thus used a more pragmatic approach to measure motivation by asking the participants how much they liked to be in the scene. The instructions in our experiment were that they should imagine that somebody would knock on the door and take them to the women or depicted activity. That takes energy and effort out of the equation and still produced significant behavioral and electrophysiological differences.

After this digression on the motivational intensity let us get back to FAAs. Whereas Harmon-Jones and Gable regard FAAs as an indicator of motivation, a recent review discusses them on a more elaborate level [44]. Specifically, the review addresses the functional role of relatively left frontal asymmetries (rLFA). Aside from rLFA as an index of an emotional or motivational response they might also alter the relationship between predictor

and outcome, directly as a moderator or indirectly as a mediator implicating an executive control function over emotional, but as aforementioned, also over attentional processes. Especially the latter makes them a promising tool to disentangle the relationship between executive control and attention.

1.4.3 Study 3 - Personal semantic knowledge guiding attention

Study 3 sheds more light on the effects of declarative memory in the attention-memory framework. What we know about the world determines how we perceive it and what we expect to happen in it. In the DC Comic universe, the people look to the sky and reason "It's a Bird…It's a Plane…It's Superman". People only think like that and thus perceive flying objects in the sky in a certain way in a world, where the general semantic knowledge comprises the existence of a flying man. General semantic knowledge, or the declarative knowledge, consists of information which is shared among the members of a society, for example, the word is a globe. The superman example might be a bit absurd, but imagine how the people in Pakistan, who learned that a shiny object in the sky actually might be a reaper drone, look up. A sunny day with a cloudless sky is a delight for Europeans - in Pakistan is drone weather and perceived completely different.

A picture of a 4-year-old girl in a Syrian refugee camp taken by the Turkish photojournalist Osman Sağırlı in 2004, illustrates how experiences shape perception. The girl

Figure2: **Left:** Turkish photojournalist Osman Sağırlı took this photograph of Hudea, 4, at the Atmeh refugee camp in Syria in December 2014 „I was using a telephoto lens, and she thought it was a weapon," he said. **Right:** Street art by TABBY, an Austrian artist.

puts both hands over her head because she thinks that the telephoto lens is a weapon (*Figure* 2).

Study 3 investigates how general semantic knowledge as opposed to personal semantic knowledge influences attentional selection. Specifically, how the self guides perception and integration processes of self-contradicting information. Greenwald regards the self as an organizational system [45] recently labeled as personal semantic knowledge [46, 47]. General semantic or world knowledge comprises general facts acquired over live independent of the encoding context. Where general facts are rather random and shared among most people ('Cars drive with gasoline', 'Trump has drawn the largest audience to ever witness an inauguration'), personal semantics are likewise independent of the encoding context, but highly personal and thus of course sometimes 'confidential.' They comprise, for example, autobiographical information and concepts ('I recall driving my favorite route with my motorcycle during summer times.') as well as personal beliefs about oneself ('I am a relaxed person') and the world ('I believe Star Trek is superior to Star Wars'). The last example admittedly could also fall under general semantic knowledge.

As mentioned above, the self guides among other cognitive and emotional processes also attentional processes. When talking about the influence of the self, at first, this thought

somehow sounds as if attention is deliberately directed at a location, an object or a feature by means of a conscious decision; The self, namely I, is doing something. Interestingly, the very opposite is the case. Again, it appears that the reason for the concatenation of the self and cognition is rooted in the ultimate human desire for survival. Not only on a physiological level but a psychological one. Considering the self is an organizational structure means to regard it as a system with distributed units, with distinct competencies interacting by a defined set of rules. Let's say one unit stores recent experiences and another holds life goals, both intertwined by a mechanism, which periodically performs a reality check, that is, comparing the current state of life with the desired state. Obviously, if the value of both units differs beyond a certain threshold, this causes psychological stress affecting not only other units but also leading to a conflagration in the whole structure or so to say network. If in our example, current state and desired state differ too much, this could be a result of poor decisions or lack of decision-making power over the personal life. This, in turn, would imply for oneself that he or she is incompetent or has a wrong attitude, and further undesirable attributes… the fire spreads and so on and so forth. The unit's mutual dependencies on each other are the foundation of personal semantics, however, at the same time, its weakness. Updating a single unit potentially comprises the structural integrity of the whole network. For the sake of completeness, not only a negative information affects the network, the same holds for something positive newly learned about oneself. Somebody who submits him- or herself to higher moral standards inevitable re-evaluates past behavior. To avoid a mental breakdown, the human psyche thus has developed astonishingly likewise elegant and efficient counter mechanisms. In cases where integration is not possible (associated with resilience), denial and suppression of inconvenient truths are mechanisms of choice – to name the most popular one. To keep the fragile equilibrium of self-related semantic network, the best strategy is not to destabilize it. Every new information, which is subject to integration processes, requires to break open deadlocked existing structures and to reorganize them. Updating the network is a

risky endeavor. Destabilization of the network is thus foremost averted by means of preventing 'unpleasant' information and/or memory to be recognized and retrieved at all. The easiest way to accomplished this is by modulating the accessibility [complete account 48, 49].

Noteworthy, forgetting or storing subconsciously is one of the key features of the memory system. Just imagine somebody would remember every instance of embarrassing behavior committed - especially during the teenage years. The brain seems to have the capability of recording everything like a videotape, considering the case of Jill Price who suffers from highly superior autobiographical memory [50]. Price can remember everything from her past as it just happened. What sounds appealing at first, means, as she describes, that time does not heal any wounds, they always stay fresh. She cannot forgive herself the mistakes she made, remembers all fights she had and every bad word [50]. It is a peculiar irony that humankind has developed multiple online archives, which especially seem to be made for storing and publicly displaying cringy moments from the past. As an alternative to burying unwelcome episodes from your past in the deepest depth of brain, where the sun does not shine, information contradicting self-image can be countervailed by fabricating new self-conforming 'memories'. However, better than a lie is the half-truth, which is why diluting the information to the extent, where it no longer corresponds to reality and poses a threat, is also a viable option. Surely, a psychology-versed reader might object at the end of this paragraph and argue that suppression of memories or emotions is not a very functional approach or a good regulation strategy and ultimately results in even more psychological chaos. A therapist might add that dealing with suppressed content is the bread-and-butter business. I am neither a psychologist, nor a therapist in any way, but the unresolved tension which arises from the lack of integration processes is electrophysiologically demonstrable and will be later discussed.

Considering denial and suppression as mechanisms to keep the coherence of the self safe and sound, it is clear that to shut the stable door after the horse has bolted might be a

little bit too late. Preservation of the self thus begins much earlier - with attention. The brain acts a little bit like a small child, holding his/her hands in front of his/her eyes when playing hide and seek in order not to be found. What remains unseen does not harm the self. With this in mind, we hypothesized that when presented with self-contradicting information, attention would be modulated in a top-down fashioned process to circumvent in-depth analysis and subsequent integration. Obviously, (visually) perceived information cannot be completely ignored but processed at different levels of awareness with different cognitive mechanisms. To see what that means, consider somebody who is confronted with information, contradicting general and not personal semantics. As an example let's take a picture of somebody posing in a slum with a broad grin. That, at first, would be socially highly unacceptable. However, on second glance, there might be a totally legit explanation for this behavior. Maybe the depicted person is a development worker who has successfully installed sanitary facilities and is now just very happy.

Whatever the explanation might be, the crucial points are first that this kind of reasoning is possible in the first place. The self is not in danger and thus - allows it. Secondly, coming up with possible explanation is an act of volition, implementing strategic semantic integration [20]. The term is not further defined in academic literature but should subsume goal-oriented retrieval of general semantic information, putting it in relation to the situation at hand and thereby iteratively creating a sound context for the depicted behavior. In contrast, when confronted with self-contradicting information the counter-techniques for the purpose of self-preservation have to be applied instantly or automatically.

All three stages of processing were observed using electrophysiology. To contrast how the human mind handles violations of personal as opposed to general semantics, we presented participants either with a picture of themselves or an unknown person in a socially acceptable or unacceptable context. Perception, integration as well as tension arising from conflicts within (personal) semantic knowledge were investigated at three different event-related

potentials. Attentional selection of foreground information, feeding information to subsequent integration processes is indexed by the N170. The N400 reflects integration into semantic knowledge, the N500 psychological tension within self-related semantic networks.

1.4.4 Study 4 - Executive Control in Attention - Insights from Mindfulness

Executive control over attentional processes is the research subject of Study 4. The approach, however, was a bit different. Automatic allocation of attentional resources seems to be the brain's default mode of operation. Investigating the way how these mechanisms can be modified and to which degree, allows drawing conclusions about this default mode and its mutual dependence on other functions. Specifically, we aimed to deautomatize attentional capture through distractors and thus increasing attentional stability through mindfulness training. Interestingly, training and application of the attentional mechanisms occurred under different circumstances, leading to the conclusion that attention modulating mechanisms are not modality or domain specific. The term training implies that with practice and experience, the required effort to hold the attentional focus in place decreases. A well suited electrophysiological correlate reflecting such a decreased effort is the steady-state visually evoked potential (SSVEP), which is the oscillatory response of cortical networks to flickering stimuli [51]. Its amplitude proportionally mirrors the use of cognitive resources, which are deployed for the task at hand and thus would potentially indicate neural efficiency gains related to meditation. Speaking of the task at hand, attention paradigms have predominantly been favored by researchers studying the positive effects of meditation. Unlike other methodical approaches, multiple object tracking (MOT) paradigms can be employed to investigate several cognitive processes associated with enhanced attentional performance at once, speicifically, selective attention, specifically the deliberation of attentional capture and executive functions. Combining SSVEPs with the MOT allows to track the deployment of resources under real-time conditions.

The study of attentional mechanism, as well as their training, is much older than one might expect. Even without (neuro-)scientific methods of Western standards, the results and conclusions about attentional processes or general socio-cognitive functioning obtained about 2500 years ago are surprisingly up to date and provide a good starting point for contemporary research on attentional enhancement though mindfulness training. Siddhartha Gautama, better known as Buddha, is one of the great minds in an introspective study of cognitive and emotional processes. In his quest for enlightenment, he developed methods which are primarily aimed at taming the mind. "*Fully alert and ever vigilant are Gotama Buddha's disciples, who by day and by night are always mindful of the component parts of the body*." it says in the Dhammapada [52], a compendium of Buddhas saying, composed to represent the very nature of his teachings. Within the framework of Buddhist psychology, the term "mindful of the component parts of the body" can be translated as sense training, whereby the mind is also a sense itself [53, 54]. The term component parts (Buddh. Skandha) comprises five aggregates from those interactions a physical and psychological entity emerges. The anatta concept of Buddhism elaborates on this point of view, proposing the absence of an independent self, an inner core or to put it religiously an (eternal) soul (Hind. atta). The self is an emergent product of non-individual physical and mental processes. Alternatively, as modern neuroscience might say it: Consciousness is the reaction of the body being exposed to the reality. The practitioner is obliged to monitor body, (1) sensation, that is, the valenced sensory experience, the recognizing and labeling of sensation itself, (2) the emerging intentions or interest, and (3) the awareness of (mental) objects. In a similar vein, in the Bodhipakkhiyādhammā, a set of qualities laying the foundation for enlightenment, it is pointed out that mindfulness should be focused on the body, the feelings, mental states (functions of the mind) and mental qualities (objects in the mind). As mentioned at the beginning of this section, mindfulness training thus is almost a multimodal endeavor, ironically excluding visual perception during the training, as meditators close their eyes.

In order to pursue this thought and to put mindfulness training into a larger perspective, a small digression has to be done into what the purpose of meditation is. The utmost aim of mindfulness practice is to prepare the mind for enlightenment. A common misconception in Buddhism is that meditation causes or inevitable leads to Nirvana - nor is it a precondition. However, Nirvana is not subject to the domain of cause and effect as it is unconditional. If it were conditional, it would have a beginning, and according to Buddhist philosophy, everything which has a beginning has an end. If this reminds you of film Matrix, this is surely not a coincidence. Consequently, Nirvana would not be the end of a journey and not be desirable for Buddhist. A mind, prepared for entering into the bliss of nirvana is according to Buddha clear like the water of a calm lake, disciplined, free of attachment simply happy and skilled in the seven factors of enlightenment (sapta bodhyanga). The latter comprises among the awareness of all inner mental processing also the effort to prevent bad influences within the mind from rising or in other words, to act according to them. The training is an ongoing endeavor and requires skilled craftsmanship as the Buddha says: "*Irrigator channel waters; Fletchers straighten arrows; Carpenters shape wood; The wise master themselves.*"

The most basic and this common practice of mindfulness is the observation of breath and mind, which also was applied in this study. While sitting down in the typical meditation pose for approximately 15 minutes, the task is to observe the sensation of breath and solely focus on the formless stream of air at the nose or the lifting and lowering of the chest. Upcoming thoughts and feeling should be registered, without evaluation or further engagement in mental processing. Then, the attention should be non-violently shifted back to the sensation. By practicing this kind of meditation, the practitioner ought to live in the present, a mindset or function he/she should take from meditation and implement in daily life.

Within the admittedly short history of scientific investigation of mindfulness, the enhanced attentional mechanisms, as well as the beneficial effects for socio-cognitive

functioning, were mainly in focus. However, the latter was not of primary interest to us as the underlying cognitive mechanisms of attentional stability, as a core feature, have not been studied in detail, yet whether mindfulness training has a positive impact directly on attentional functions, increases working memory or enforces the impact of executive control functions is unknown.

That is mainly due to the widely acknowledge methodological limitations such as the lack of longitudinal studies and in particular the lack of appropriate active control groups. In the prelude to meditation research highly experienced practitioners were subject to scientific investigation. Probably best known are the single subject studies with Matthieu Ricard, a Buddhist monk with a Ph.D. in molecular biology [55]. Monks are highly advanced meditators, depending on the lineage to reach the rank of a Lama, some monks have to meditate three years and three days in a cave - all by themselves. This extreme example shows that in order to endure such exertions a distinct type of personality and ability are required. Of course, this probably holds also for experienced lay-practitioners, which raises the question what comes first or drives the reported effects: A general affinity for meditation probably based on preexisting appropriate psychological neuronal structures or an actual successful mindfulness training. Possibly, it is a combination; the ones who have a talent for meditation are the ones who gain enhanced skills. Whatever the key element might be, more longitudinal studies following a standard experimental procedure are required to integrate the results into a cohesive framework of mindfulness training. To put it differently, to test the null-hypothesis that automatic attention itself is inelastic, hardwired process, which hardly can be modified by another mechanism more advanced study designs are required.

Additionally, to the before and after training comparison, the control group has to be chosen carefully. The effects which presumably result from meditation, have not yet been proven to be a unique feature. Many other techniques at least have the potential to be likewise efficacious when it comes to an unspecific positive effect on the practitioner's mind and body.

Especially progressive muscle relaxation (PMR) has been shown to reduce physical and psychological stress - two factors believed to constitute the beneficial effects of mindfulness - and resembles mindfulness training in many aspects [56]. The tight relationship between affect and attention and (working) memory [7] lets some researchers assume that enhanced attentional capabilities indeed originate from improved socio-emotional functioning [57].

This perception might also be ascribed to the fact, that within the framework of mindfulness meditation, the diving line between emotional and attentional training, is rather fuzzy - concentration on the breath while discarding sensations and emotions can be regarded as attentional or as emotional training. Hence, PMR is an optimal active control group comprising the affect regulating characteristics of mindfulness training. Most importantly, both approaches have similar so to say technical approaches as they require focusing on bodily states, with varying notions. Whereas meditation focuses more on the ability to concentrate the mind solely on the sensory aspect of breath, while discarding or ignoring other physical and mental events, PMR focuses on the alternating sensation between muscles tension and relaxation at various muscle groups. In short, tension is voluntarily build up in a sequential order in muscle groups all over the body. The release of tension is linked to a self-chosen word and thus conditioned. Upon the experience of stress, the mental reciting of the conditioned word helps releasing bodily and in turn psychological stress. Aside from this conditioning, mental training, however, only plays a subordinate role in PMR leading to another most distinctive feature: The superordinate aim of meditation is to achieve a state of equanimity, which is not only held during meditation but, during daily life. Training and daily life flow into each overcoming the dissociation being essential to PMR. Aside from this clinically proven method effects of meditation could possibly be a placebo effect. The very setting of a meditation session with dimmed light, strange sitting posture, and exotic stories about meditation surely has a suggestive impact. For that reason alone, an active control group is a requirement.

Most importantly, as PMR and mindfulness likewise lead to the reduction of psychological stress this allows to conclude that the potential overshoot of enhanced attentional stability in the meditation group can be ascribed to modulating effects of cognitive and not emotional functions. Modulation of attention through motivation and affect-regulating systems is investigated in Study 1 and 2. Hence, the mindfulness approach allows to investigate the influence of generalized executive control on attention. Given the case that PMR does not exhibit similar results, the study controls for effects of emotion(-regulation) on attention. The study aimed to combine the advantages of a multiple object tracking task and SSVEP to investigate whether eight weeks of mindfulness meditation leads to improved neural network efficiency of sustained visual attention during encoding and maintenance of information in visual short-term memory.

1.5 Summary and outlook

The aim of the present dissertation is to investigate complex attentional selection processes by electrophysiological means. To overcome conventional approaches regarding attention as perceptual filter, four studies with very different designs constitute this dissertation. Study 1 investigates the automatic allocation of attentional resources at an early stage of the visual stream in response to motivational relevant information as opposed to likewise affective stimuli as well perceptual identical ones. Study 2 provides an account for modulation of this very attentional gain processes through executive control processes. Specifically, Study 2 investigates electrophysiological correlates of striatal reward modulation, presumably by frontal areas, thereby complementing the bottom-up approach of Study 1. How declarative memory guides attentional processing is investigated by Study 3, further emphasizing the volitional aspects of executive control. The study highlights that executive control is not necessarily a function of a dedicated networks but rather arises from the network's structural properties or its principle of order.

Lastly, selective attention and executive control are the research subject in Study 4, complementing the emotional top-down mechanisms investigated in Study 1 and 2, with cognitive control mechanisms. Study 4 further highlights the mode of operation of the attentional focus itself as well as its close relationship with working- or visual short-term memory.

As mentioned in the introduction, the studies illuminate the phenomenon of attention from several perspectives. With the aim to structure the new empirical results and to create systematic framework, Cowan's model of attention and memory serves as a reference. In the next stept, the framework is updated accordingly, generating prediction for further studies.

2. Publications

Manuskript Nr. 1

Kuhr, B., Schomberg, J., Gruber, T., Quirin, M. (2013). Beyond pleasure and arousal: appetitive erotic stimuli modulate electrophysiological brain correlates of early attentional processing. NeuroReport, 24, 246-250.

Manuskript Nr. 2

Schöne, B., Schomberg, J., Gruber, T., & Quirin, M. (2016). Event-related frontal alpha asymmetries: electrophysiological correlates of approach motivation. Experimental brain research, 234(2), 559-567.

Manuskript Nr. 3

Schöne, B., Köster, M., Gruber, T., (2017) Coherence in general and personal semantic knowledge: Functional differences of the posterior and centro-parietal N400 ERP component *Accepted for resubmission in Experimental Brain Research*

Manuskript Nr. 4

Schöne B., Graetz S., Gruber T., Malinowski P., (2018), Mindfulness meditation facilitates efficiency gains in brain networks: A steady state visually evoked potentials study, *Submitted to Scientific Reports*

Kuhr, B., Schomberg, J., Gruber, T., Quirin, M. (2013). Beyond pleasure and arousal: appetitive erotic stimuli modulate electrophysiological brain correlates of early attentional processing. NeuroReport, 24, 246-250.

Abstract

Previous studies investigating affective reactions to pictures, which elicit a specific affect, have mainly focused on the dimensions valence and arousal. Using an event-related picture-viewing paradigm in electroencephalogram (EEG), we investigated whether erotica, i.e. appetitive, evolutionarily relevant stimuli, have effects on early stages of attentional processing that are distinct from other positive and arousing stimuli. Seventeen male students viewed arousing photos of erotic, nude women or extreme sport scenes, as well as control pictures of attractive, dressed women or daily activities. Erotic pictures differed from extreme sport pictures not only in late but also in early attentional processes as indicated by event-related potentials (ERPs) appearing as from 130ms after stimulus onset (P1). The findings suggest a) that the dimension of appetence should be considered in addition to valence and arousal when investigating psychophysiological reactions to affective-motivational stimuli and b) that early attentional processing as mirrored by the P1 can be influenced by motivational systems.

Key words: EEG, ERP, motivated attention, approach, appetence, valence, arousal, negativity bias

Schöne, B., Schomberg, J., Gruber, T., & Quirin, M. (2016). Event-related frontal alpha asymmetries: electrophysiological correlates of approach motivation. Experimental brain research, 234(2), 559-567.

Abstract

Over the last decades frontal alpha asymmetries observed during resting state periods of several minutes have been used as a marker of affective-motivational states. To date there is no evidence that alpha asymmetries can be observed in response to brief affective-motivational stimuli, as typically presented in event-related designs. As we argue, frontal alpha asymmetry might indeed be elicited by brief events if they are salient enough. In an event-related design we used erotic pictures, i.e. highly salient incentives to elicit approach motivation, and contrasted them with pictures of dressed attractive women. As expected, we found significant alpha asymmetries for erotic pictures as compared to control pictures. Our findings suggest that the highly reactive reward system can lead to immediate, phasic changes in frontal alpha asymmetries. We discuss the findings with respect to the notion that high salience of erotic pictures derives from their potential of satisfying an individuals' need by mere visual inspection, which is not the case for pictures showing other types of motivational stimuli such as food.

Keywords: appetence, approach motivation, frontal alpha asymmetries, EEG

Schöne, B., Köster, M., Gruber, T., (2017) Coherence in general and personal semantic knowledge: Functional differences of the posterior and centro-parietal N400 ERP component *Accepted for resubmission in Experimental Brain Research*

Abstract

A growing body of scientific literature investigated the difference of general and personal semantic knowledge. In contrast to general world knowledge, personal semantics comprises highly individual knowledge about oneself. The present study aimed to differentiate processes of integration into personal as opposed to general semantic knowledge. For that purpose, participants were presented with pictures of themselves (*Self*-condition) or unknown persons (*Other*-condition) superimposed on a congruent or incongruent background. We hypothesized that self-referential processing is based on automatic retrieval of personal information as opposed to the processing of unknown persons, which requires voluntary, i.e. strategic, attention demanding processing. The topography of the N400 effect varied as function of the type of semantic knowledge. We found a centro-parietal N400 effect within the Self-condition and a posterior effect within the Other-condition. The voluntary integration of facial expressions of unknown persons within the Other-condition was furthermore indexed by an N170 effect. The unresolved tension in personal semantics was reflected by the N500. Our study thus provides new impulses for interpretation of the N400's functional properties and extends our knowledge about the N500. Implications for the functional properties of the self as an organizational structure are discussed.

Keywords: Personal Semantics; General Semantics Event-related potentials; N170; N400; FN400; N500

Schöne B., Graetz S., Gruber T., Malinowski P., (2018), Mindfulness meditation facilitates efficiency gains in brain networks: A steady state visually evoked potentials study, *Submitted to Scientific Reports*

Abstract

The beneficial effects of mindfulness-based therapeutic interventions have stimulated a rapidly growing body of scientific research into associated psychological processes. Resulting evidence indicates that engaging with mindfulness meditation is associated with increased performance on a range of cognitive tasks. However, the mechanisms promoting these improvements require further investigation. We studied changes in behavioural performance of 34 participants during a multiple object tracking (MOT) task that taps core cognitive processes, namely sustained selective visual attention and spatial working memory. Concurrently, we recorded the steady-state visually evoked potential (SSVEP), an EEG signal elicited by the continuously flickering moving objects, and indicator of attentional engagement. Participants were tested before and after practicing eight weeks of mindfulness meditation or progressive muscle relaxation as active control condition. The meditation group improved their MOT-performance and exhibited a reduction of SSVEP amplitudes, whereas no such changes were observed in the relaxation group. Neither group changed in self-reported positive affect, while a marginal increase in negative affect was observed in the mindfulness group. Changes in self-reported mindfulness were absent. The reduction of the SSVEP after mindfulness meditation training suggests the refinement of attention networks, enabling more efficient use of attentional resources.

3. General discussion

3.1 Summarized results

The aim of the studies in the present dissertation was to investigate complex selective attention by means of different EEG-paradigms. Study 1 investigated the automatic attentional gain mechanisms in response to neutral, positive and motivational stimuli, respectively. The participants were presented with high-approach motivation erotic pictures as well as with extreme sports pictures, which despite the fact that they were likewise positive and arousing lacked the motivational relevance. To control for perceptual effects, we further included respective conditions, namely pictures of dressed women and pictures of daily activities. As a result, all ERPs indexing different cognitive function along the visual stream, such as early attentional gain (P1), face and silhouette feature processing (N170) and the activation of the motivational system itself (P3/LPP), were modulated by approach motivation. The study was the first controlling for valence and arousal at different levels of motivational relevance, thus refuting the long-standing assumption, that only negative stimuli are prioritized and subject to early selection. The P1 effect known as negativity bias thus should be considered as a motivational bias. Furthermore, the study showed that motivational relevance is not fully represented by the affective dimensions of valence and arousal, suggesting the necessity for a third affective dimension. Appetence or motivational relevance allows differentiating between high positive arousal with and without the tendency to approach the object.

The behavioral results, namely the ratings from Study 1, are complemented by the electrophysiological results from Study 2. Relative left-sided reduction (rLFA) in frontal alpha asymmetries (FAAs) have been regarded an indicator for approach motivation. FAAs for erotic pictures, but not for extreme sports pictures underpin the claim that despite the conventional notion that both types of pictures should elicit appetence, this holds only for the erotic ones. Furthermore, and most important for integrating the results into a larger

framework, the FAAs index mirror top-down inhibitory executive processes regulating striatal reward encoding [37].

Top-down modulation of attentional selection was also investigated in Study 3. We presented participants with pictures violating their personal or general semantic knowledge to trigger either automatic or volitional exploration of a visual scene. The scenes consisted of a person, which was either the participant or an unknown person superimposed on a congruent or incongruent background. In order to integrate incongruent scenes, fore- and background have to be related in a meaningful manner. The voluntary integration utilizing facial information of unknown persons within the *Other*-condition was indexed by an N170 effect and further accompanied by a posterior N400-effect indicating access to semantic knowledge. In the *Self*-condition, the facial features were automatically neglected, the N400 effect was cranially shifted to central sensor sites, indicating access to personal semantic knowledge. We concluded that automatic attentional and integration processes are orchestrated by the personal-semantic structures in order to preserve their overall organization structure. The resulting tension, or discords, generated by self-contradicting information is reflected by the N500 component.

In order to find out more about the mode of operation of the attentional focus facilitating attentional selection, we applied a mindfulness training. The aim was to deautomatize the attentional capture and thus increase distractor resistance. Specifically, participants learned in the mindfulness training to focus on the sensation of breath and ignore mental distractions. Using a multiple object tracking task that taps core cognitive processes, we were able to show that this trained executive ability generalized to visual attention. Opposed to an active control group, we found an increase in performance which was accompanied by a decrease of the SSVEP, suggesting the refinement of attention networks, enabling more efficient use of attentional resources. Specifically, we provide evidence for an enhancement of encoding and maintenance of task-relevant information in visual short-term

memory. The use of an active control group allows to conclude that the found effects cannot be reduced to the socio-emotional benefits likewise attributed to progressive muscle relaxation and meditation.

3.2. Aim of the general discussion

The four studies constituting this dissertation investigate different mechanisms (i.e., attentional gain, executive functions) and systems (i.e., short- and long-term memory, frontal executive systems) along the visual information stream. Beginning with early automatic attentional filtering (Study 1, P1), followed by a volitional exploration of a scene (Study 3, N170). We investigated the impact of executive control functions on attention relevant affect (Study 2, FFAs), self-contradicting information (Study 3), and the interplay between the attentional focus and working memory. In this view, the term "focus of attention" refers to a subset of elements in the visual short-term memory, which is enhanced [58] for further processing. Hence, the increased resistance to distractors is an increased capacity of the visual short-term memory (Study 4).

To give the studies a common frame, Cowan's basic model of information processing (*Figure* 3) provides a good starting point and will be briefly summarized. The key feature of the model is that stimuli are cortically represented in the activated parts of long-term memory. According to Cowan, activated stimuli can be further processed either in or outside the attentional focus, thereby, introducing the concept of memory with and without attention (see Cowan [7] for a detailed description). In Cowan's model attended information is synonymous with conscious awareness [7], a view that was challenged by many researchers [e.g. 59, 60]. Nevertheless, it seems to be a useful heuristic to regard attention and awareness as two closely linked phenomena. In fact, attention is most often considered as a prerequisite to access awareness [61,62]. Cowan postulates three mechanisms, which determine if a feature is activated inside or outside the focus of attention, namely habituation, dishabituation (bottom-

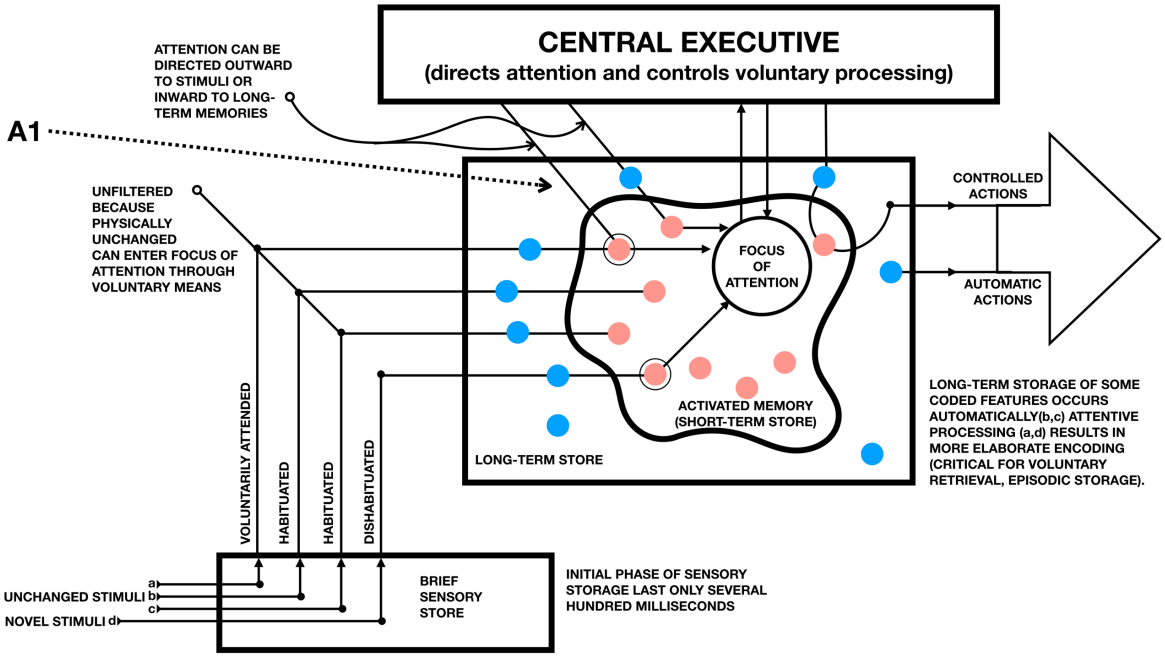

Figure 3: Cowan's basic model of information processing (*see text for details*)

up components), and voluntary processes initiated by a 'central executive' (top-down component). These processes will be revisited considering the new empirical data. According to Cowan's model, the processing system contains a physical description of an unchanged sensory input in memory, which results in habituation. Habituated stimuli are processed outside the focus of attention. Any physical change in the sensory input leads to a mismatch with the mental representation, resulting in attentional gain (dishabituation). Hence, long-term memory contents are switched into an active state and further processed within the focus of attention. The system is able to shift attention towards all stimuli by means of voluntary processes.

The subject of a central executive has bugged researchers right from the beginning, as single executive systems seemed plausible by introspection, but never was clearly defined [63] or neuro-scientifically proven. Contemporary approaches argue in favor of distributed executive functions [64, 65], an updated framework, however, is not provided. It is thus one

of the aims of this dissertation to provide an alternative account for executive functions other than putting them in a superordinate box.

In a first step, the results from all four studies are mapped onto Cowan's model with special emphasis on possible discrepancies. The studies employed very different (unconventional) approaches to investigate various aspects of attentional selective processes, Cowan's model provides a framework to evaluate the results in a structured manner. Taking into account the said discrepancies, secondly, an updated version of Cowan's framework is proposed integrating and evaluating the new empirical data. Finally, new questions, concepts and predications arising from the model are discussed.

3.3 Mapping the new data on Cowan's framework

3.3.1 Studies 1 and 2

Study 1 shows that what Cowan refers to as novel/dishabituated stimuli does not fall into a homogeneous category. Specifically, positive and arousing stimuli can further differ with respect to their motivational value. Furthermore, executive functions, as investigated by Study 2, mediating reward encoding in sensory stores are not part of Cowan's model. Stimuli, automatically gaining attention find consideration in Cowan's model, but only to a limited extent. Path (d) includes novel, dishabituated stimuli, facilitating an enhanced (behavioral) response, even if the stimulus category would be known, as opposed to a habituates response. Erotic pictures would clearly fall under this definition, pictures of dressed women and daily activity could be regarded as facilitating habituated responses. However, extreme sports pictures would also fall into the same novel/dishabituated-category as erotic pictures, but the model's prediction attentional gain does not hold. More features are extracted from erotic pictures, allocating much more of the available resources compared to extreme sports pictures or the other physical control conditions. The habituated/dishabituated differentiation might thus not be the ideal label and according to Study 1 and especially Study 2. Striatal reward

encoding, either directly imposed by the amygdala or indirectly via frontal regions is not comprised in the model, an evaluative function assessing the motivational value corresponding to the low road of the visual information stream as well as top-down inhibitory executive processes seem to be necessary. This function could thus be explained in terms of an evolutionary amplifier, selectively filtering information at early stages of processing in order to give them priority.

3.3.2 Study 3

Study 3 deals with two aspects of Cowan's model. First, volitional, that is, task oriented direction of attention and automatic inhibition of attention. According to Study 3, the superordinate structure being held responsible for volitional aspects of attention, the central executive, corresponds to functional network properties of long-term memory networks. Whether attention is guided voluntarily or automatically is a matter of personal relevance.

Whenever incoming visual information is processed in violation with respect to general semantic knowledge, it is volitionally attended (*Other*-condition), whenever it violates personal semantic knowledge it is automatically ignored (*Self*-condition). The volitionally attended information is according to Cowan processed within the focus of attention, considering Study 1 and Study 2 that makes two mechanisms by which information from the brief sensory store can be further processed: Automatically or volitionally attended information is processed quicker and in-depth. Cowan’s framework further comprises information, which is part of the working- or short-term memory, but not subject to the attentional focus. Study 3 shows that information can be prevented from being processed in-depth automatically in order to preserve structural organization of networks, adding a third mechanism – automatic deactivation. This process is completely left out in Cowan’s model, which is quite surprising, because as mentioned before, inhibitory processes are one of the core processes in interneural communication. Actually, voluntary deactivation should be

additionally incorporated into the model, as the prime executive function, but as none of the four studies provides data for this mechanism, it is not further discussed for the present purpose. The active integration processes occurring in Study 3 further adds mechanism No. 4 – voluntary activation. In order to resolve depicted incongruencies in the *Other*-condition, a fairly large amount of information, specifically general semantic knowledge is needed. As Cowan points out, information does not necessarily need to be in the focus of attention to solve a task at hand in a goal-oriented manner [7]. Hence, volitional activated long-term memory could account for that phenomenon.

3.3.3 Study 4

Study 4 suggests that selective visual attention is a function of working memory, implying that distractor resistance is not modified by the novelty or the (dis-)habituation to the moving disks in the MOT. Unlike Cowan assumes, the study shows that the number of items, which can be held in short-term memory is a fixed variable. The short-term memory capacity can be enhanced by training the distractor resistance of the attentional focus.

According to Cowan, the only way stimuli can automatically gain attention is if they are novel and dishabituated or when the present visual input deviates from the mental representation (dishabituated). However, that does not explain how non-salient distractors as used in the MOT can hijack the attentional focus, in particular as the visual input and thus the mental representation continuously changes during the MOT. The newly added evolutionary amplifier (*cf.* 3.3.1) does also not provide a solution to this problem. A new model could account for the reported effects by a more fine-graded view of the attentional focus, which not only reacts dichotomously to salient or non-salient stimuli but can be defined by its general sensitivity to visual stimuli. Regarding the attentional focus itself as an executive function, which can be de-automatized might be a crucial step in retiring the central executive as unitary concept.

What has been left out so far is the central executive, although associated functions have already been discussed. Cowan's framework includes a central executive concept, however, contemporary approaches argue in favor of distributed executive functions [64, 65]. Study 3 exemplifies that long-term memory exerts automatic executive functions in order to preserve memory structures. This concept is in line with the most recent discussion of the possibility or plausibility of a unitary central executive [64]. Specifically, Logie suggests to retire it in favor the concept that executive control arises from the interaction among multiple different functions emerging from different but overlapping brain networks [64]. One type of executive function possibly arises from the long-term memory itself as they emerge from inherent structural constraints, that is, the need for stability.

As shortcomings of Cowan's framework in consideration of the four studies have been discussed, a positive approach is the subject of the next section, in which a new, revisited version of the model is proposed – the model of complex attentional selection (*Figure* 4).

3.4 An updated framework

On the basis of the publications in this dissertation, a modified version of Cowan's original framework is proposed. The employment of rather unconventional paradigms allows to extend the framework beyond the scope of traditional approaches. The newly gained insights of attentional processes and their modulation through executive functions are further reviewed amid their significance for future research.

The overall structure, as well as the functional connections of Cowan's model, are preserved. In the updated framework, visual information is fed from the brief sensory store to

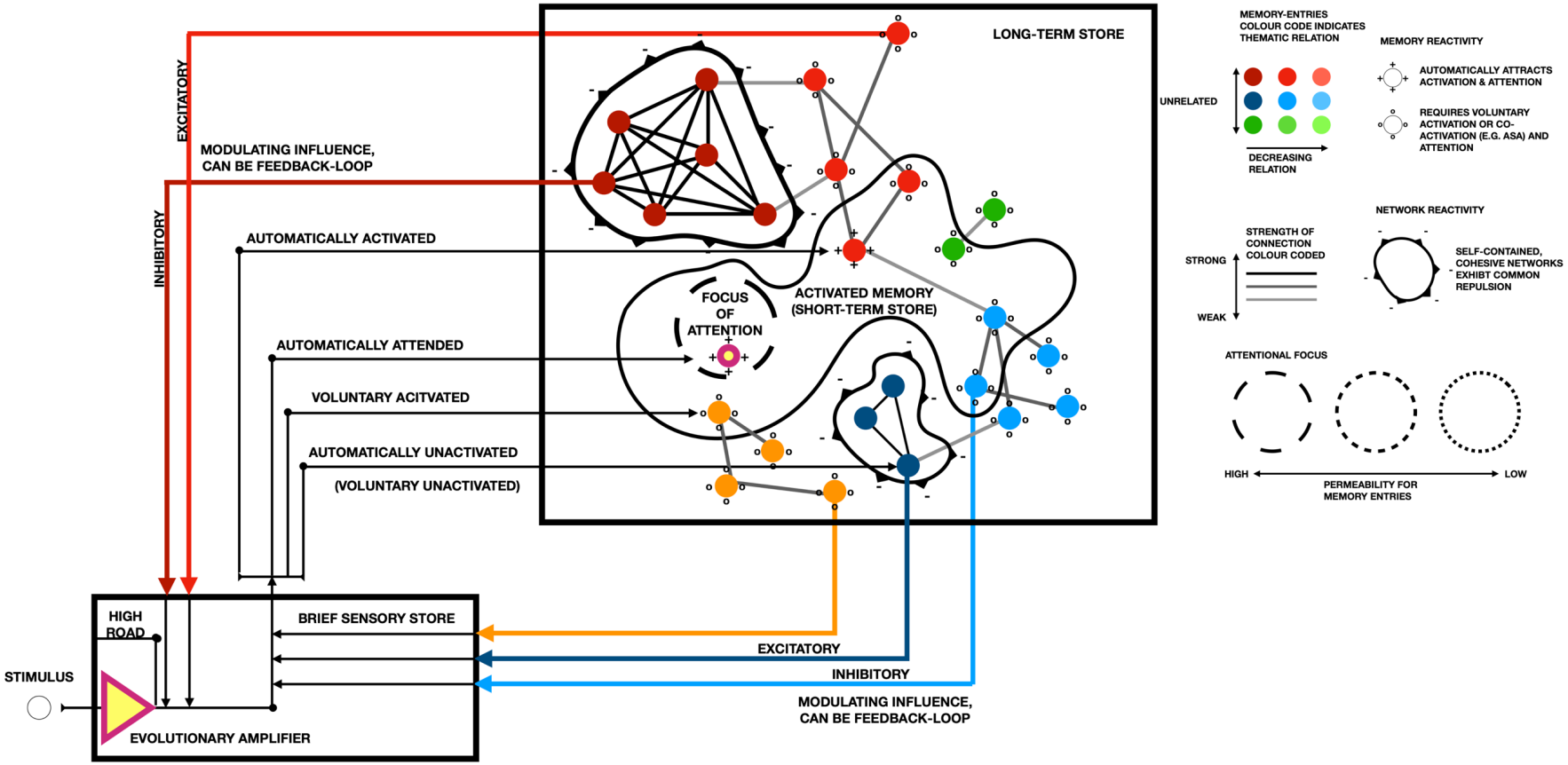

Figure 4, Model of complex attentional selection: A revisited version of Cowan's model integrating the empirical data. Highlights are (a) the evolutionary amplifier in the brief sensory store (Study 1 & 2), (b) Functional network properties, replacing the central executive with feedback connections to the sensory store (Study 3), and (c) am attentional focus with varying permeability constituting executive attention (Study 4).

a long-term memory store. The notion that (visual) short-term memory (or working memory) is an active form of long-term memory is likewise a key-feature of the new model.

Three major adjustments catch the eye: (1) The brief sensory store has been extended with an evolutionary amplifier, selectively prioritizing or suppressing information according to its motivational value. (2) The central executive has been removed in favor of feedback connections coming from long-term memory. An evolutionary amplifier and long-term memory modulate the information flow from the brief sensory store to visual working memory. (3) The attentional focus is understood as an executive function, exhibiting a new property ('permeability') describing its stimulus sensitivity. In the following, the model is elaborated in detail.

3.4.1 The central executive as network properties

The revisited model (*Figure* 4) has two basic premises. Well, it is more like 1.5 to be fair. Firstly, the guiding principle of interaction between attention and memory, which includes long-term as well as short-term memory and the focus of attention, can be reduced to the properties of single network entries as well as their interconnected relationship to other entries. Entries' properties, as well as the nature of the interconnections, define in turn the properties of the larger networks. On the next level, network interactions form new constraints for short-term memory activation and the focus of attention. It follows, secondly, that the central executive is an emergent product of these interactions and does not exist as a unitary entity. Executive functions are functional network properties. Baddeley states that the problem with a vaguely formalized concept of a unitary executive control system is that it downright invites to turn it into mock structure and to argue against it [63,66] (*Figure* 5).

Maybe this is one of the reasons he presumes that the central executive can be fractioned into subcomponents. This further would comply with neuroanatomical realities as not part of the brain can be identified as a sole correlate of an 'executive.' However, that steals

the argument's thunder only at first sight. Splitting the box 'central executive' in various boxes

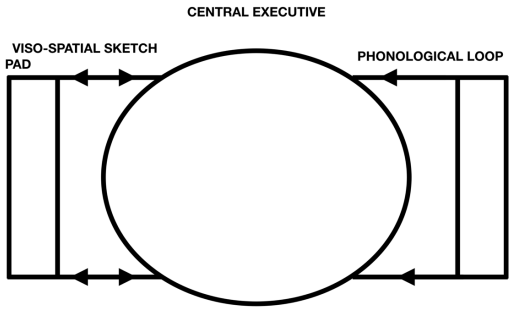

Figure 5: The Baddeley and Hitch (1974) model of workin memory

Baddeley, A. D., & Hitch, G. (1974). Working memory. Psychology of learning and motivation, 8, 47-89.

like 'task monitoring,' 'task switching,' 'maintaining objects in memory,' 'response suppression' and so on and so forth is more like a graphical trick than a real solution to the problem. It appears to be more logical because as it represents more what we know about the organizational structure of the brain as a distributed system. However, image a possible model, which comprises boxes with said executive processes, the distance between the boxes does not really mean anything. There is no epistemological difference between putting all those mechanisms in one box and labeling it 'central executive' or drawing separate boxes. By adding a further box with a label, every model can be modified in such a way that every counterargument is refuted. That is boxology.

3.4.2 A functional approach

Cowan's approach was rather a stage than module oriented. Long-term and short-term memory differ concerning their current functional value. Short-term memory is an active state of long-term memory, rendering the actual labels more or less a reminiscence to preceding concepts of memory. The revisited model takes up the thread and spins it further while preserving its overall modular configuration. The model still comprises a brief sensory store and a long-term store, with memory entries which can be switched into an active state.

Furthermore, entries in the active state can be subject to the focus of attention. As mentioned above, what has gone lost is the central executive as a unitary construct. The function exhibited by the central executive, however, is still present in the model. For example, selection of relevant stimuli, that is, activation of respective memory and direction of the attention (Arrow A1 in *figure* 3), is now represented by (feedback-)connections from the long-term store to the brief sensory store (*Figure 4:* colored arrows). Stimuli gain attention because of the importance or relevance they convey for memory networks. A person, for whom many entries and connections are prevalent in a network is easily recognized, somebody unknown might pass unnoticed (see 1.4.3). Signal selection within the brief sensory store is governed by network topologies in the long-term store. Regarding Cowan's model, it is somewhat redundant at this point, because there is already a connection (a) from the sensory store to the long-term store and the activated memory, intercepted by a connection from the central executive.

The difference in the notion of the memory entries in Cowan's model and the revisited version is that these entries are now understood as complex, interdepend networks, which not only provide information but closely interact and communicate with each other. They are not just a storage, which is called by another function, like computer hardware, but dynamic systems exerting force or influence on each other or other systems - and themselves. This creates the impression of superordinate executive functions. In the following the brief sensory store, its relation and interdependence with long-term memory as well activated memory and the attentional focus are discussed. Very particular attention is paid to the functional properties of memory networks.

3.4.3 Brief sensory store

The concept of a brief sensory store in the revisited model is very much the same as in Cowan's model. It contains sensory information which decays within a few milliseconds when

unattended. Study 1 demonstrated that an automatic attentional gain in primary visual areas occurs automatically in response to motivational, that is, biological relevant incentives. Erotic pictures convey significant evolutionary information. The mechanism which is held responsible for an immediate automatic action is introduced as 'evolutionary amplifier.', prioritizing significant information as indexed by an increased P1 amplitude. Although evolutionary memory could be included in long-term memory as a further network, it is included in the brief sensory store to illustrate its strong influence over perception and attention. Salient information is processed with high priority and travels aside the slower cortical pathway also along a fast pathway. Especially potentially threatening stimuli travel along a phylogenetically old subcortical pathway (low road) involving the amygdala [67]. Hence, reactions take place before a detailed visual image is consciously perceived. The selective amplifier is conceptualized to reflect the influence of the amygdala and conjoint subcortical structures, directly or indirectly via the frontal cortex modulating reward encoding in sensory stores.

Furthermore, the memory networks displayed in the model fall into the category of declarative knowledge, implicit or evolutionary knowledge could alternatively be included by displaying the long-term store three-dimensional with separated but connected layers for a different type of memory and by that reflect more the cortical top-down modulation.

Top-down modulation of sensory content through long-term memory, either automatic or voluntary, is part of Cowan's model, although it is not graphically illustrated. Study 3 contributes further insights on the executive influence of general and personal semantic knowledge attentional processes. As elaborated in the preceding section, this fine-grained approach to executive functions is not part of Cowan’s model as they are regarded an independent unitary system. Depending on the state of memory (cohesive or unconstrained; see paragraph 3.4.4 Topologies of memory networks), the incoming visual information is processed either automatically or voluntary. Information violating cohesive personal

semantics are automatically inhibited, without further attentional gain to prevent auxiliary information extraction from visual scenes (*Figure* 4: Colored arrows, labeled *inhibitory*). In contrast to the *Other*-condition, incongruent information in the *Self*-condition does not gain more attentional resources, which would be needed for volition integration processes into semantic knowledge. Cowan's model simply subsumes these mechanisms in his model as habituated responses.

Conversely, information violating unconstrained general semantic knowledge is voluntarily integrated into existing network structures shifting the focus of attention (*Figure* 4: Colored arrows, labeled *excitatory*). However, this does not necessarily occur as elaborated in the subsequent paragraph. Stimuli become either an activated part of the short-term memory in case they a subject to further processing or can be excluded from it, that is, they violate personal semantic knowledge. The model does not comprise the possibility that they are directly handed over to the attentional focus, as it is hypothesized that the selection from short-term memory is a function inherent to the focus of attention.

3.4.4 Topologies of memory networks

3.4.4.1 Disturbance in the force

Cowan's model comprises long-term memory as well as a central executive. Referring to Kandel's quote from the introduction, however, what if not a long-term memory structures would constitute a central executive?

"The only watchmaker is the blind forces of physics.", Says Richard Dawkins in his book The God Delusion [12]. He refers to the watchmaker analogy, stating that a complex machine or design requires a designer. This teleological argument is often advanced in favor of the existence of God, given the various lifeforms inhabiting our planet. Darwin provided in his "The Origin of Species" an account, which reduced the genesis of life to biology and thus in turn to physics - broadly speaking [68]. The central executive, the self, ego, I or however it

might be called in some way is the God of Psychology: Its ordering and caring hand behind the scene is often assumed but never proven. It might likewise be reduced to neurobiological processes or functional properties of networks. To put it differently, networks are self-organizing systems, their inherent mechanisms which guarantee stability are mistaken for superordinate, unitary entity.

As study 3 shows, stability seems to be the guiding principle of personal-semantics, and it seems reasonable to extend this idea to other types of memory. Only a sufficient consistency in networks promotes behavioral routines [46, 47]. Having the same memory for personal and general facts everyday structures the daily life. Instability or inconsistency likewise is associated with psychological disorders. Taking up the thought that executive mechanisms ensuring consistency in these networks can be reduced to simple physical processes, Le Chatelier's Equilibrium Law could be analogously applied here [69]. It states that every chemical system strives for a stable condition or equilibrium. Whenever this equilibrium is disturbed, the system will adjust itself to countervail the pressure. In Biology, this principle is called homeostasis. It plays a role in balancing inhibition and excitation in the central nervous system via the sympathetic and parasympathetic nervous system, and it also manifests in excitatory and inhibitory postsynaptic potentials or their respective neurotransmitters [11].

3.4.4.2 Cohesive networks

From Study 3, one immediate conclusion about network topologies is that cohesive networks, which due to their strong connections are self-contained, cannot not be easily transferred into an active short-term memory state. Due to their tight interlinkages (*Figure 4*: grey lines), modifications of single entries could destabilize the broader network in a conflagration like matter. Once the relations between the nodes surpass a certain degree of interconnectedness, the whole networks exhibit a common repulsion to other nodes and resist

activation in order to preserve its structure (*Figure 4:* common jagged line). Activation should be avoided for the reasons that when the inactive long-term memory status is restored the content of the memory entry might have been reevaluated as well as its relations to other entries. However, memory is in constant flux, not only when it is in an active state or consciously perceived, but also when it is in the long-term state. The collective repulsion, illustrated by jagged line marking out the network, is thus exhibited continually and not only restricted to the activation mechanism. Study 3 further provides evidence that cohesive networks are not held incommunicado. The upcoming N500 component indicates integration in these networks is associated with personal stress.

Two premises about functional network characteristics are prerequisites for this outline of network topology. Both are well known and not directly related to the studies presented, however, for the sake of completeness they should be mentioned. Firstly, from priming studies we can deduct those semantically related nodes are always located in vicinity to each other. The model comprises thus a color code for the relation of memory entries. Secondly, Hebbian learning and computer models of neuronal networks imply that connections between neurons can be stronger or weaker (*Figure 4:* grey lines between memory entries). The latter is insofar import that the model assumes that strong connections within cohesive networks induce far-reaching activations all over the networks. Related entries are more likely to establish stronger connections (*Figure 4:* darker lines between memory entries).

3.4.5 Memory reactivity

Among semantic relation and strength of connection, entries have one more feature which is also included in Cowan's model, but rather as an executive function. Study 3 shows that visual information in conjunction with general semantic knowledge is a requirement for voluntary semantic integration as indexed by the centro-parietal N400 component. Automatic

integration is indexed by the posterior N400. Voluntary semantic integration means that acquired visual information is related to existing knowledge in a sound manner. The volition in this process refers to the active recall of information and evaluation according to its possibility or soundness. In Cowan's model, long-term memory can be called as well by the central executive, however, entries can be automatically activated or come into focus voluntarily. Taking the expression 'attract attention' literally, salient or relevant entries attract set of activated memory. They are referred to as type S entries and illustrated as circles marked with '+' (see legend *Figure 4*, *S* for salience). Other entries require being absorbed voluntarily, as they do not attract the set of activated memory. They are referred to as type V entries and illustrated as circles marked with 'o' ' (see legend *Figure 4*, *V* for volition). Entries might be salient because the convey for example, motivational or self-relevant information. Type S entries furthermore attract the focus of attention, however, unlike entries activated by the evolutionary amplifier, they first have to become a part of the active set. Furthermore, as Study 3 shows, self-relevant information, which poses a threat to personal semantic network coherences can be excluded from the active set automatically. The idea of a two-stage model of (visual) short-term memory has previously been proposed, however, the data situation is insufficient to draw a definitive conclusion [67]. Type S entries facilitate the automatic spread of activation (ASA) in networks and account for priming effects as they might serve as automatic entry node for the whole network. They complement thus the interneural connections. Type V entries can automatically slip into the active only when they are co-activated through ASA. Although the model has a seemingly binary approach to memory reactivity, this is not necessarily the case, but a working approach.

3.4.6 The attentional focus

As the capacity of VSTM is limited memory reactivity promotes efficient use of resources. Type S entries replace type V whenever they are not held voluntarily in the active

set (Not depicted in *Figure* 4). The capacity of the VSTM critically depends on the distractor resistance of the attentional focus. The less often it shifts to other nodes or the less it is prone to deflections, the more continual is the set of active memory and in turn the objects in focus. Distractor resistance is regarded as an executive function. Specifically, monitoring and subsequent adjustment of behavior constitute deautomatization. To put it differently, Study 4 shows that holding the focus in place requires mental effort. This is very much the case during mindfulness training; mindfulness means to monitor thoughts and feeling and, if required, non-violently direct the attentional focus back to the sensation of the breath. Mental effort decreases with training and this technique or this mechanism generalizes to other cognitive domains and is automatically applied during the MOT. Hence, it follows from Study 4, that with the intent to reduce executive functions to functional properties, enhanced distractor resistance could be a feature of the attentional focus. Training could make the focus selectively permeable to memory entries with different permeability for in- and out-vectors. The permeability of the attentional focus in the model is graphically illustrated by a dashed line with varying spacing (*Figure 4:* see legend).

Incoming type-S entries are likely to pass the attentional membrane from the outside and are held within focus, indexed by the P1 and subsequent ERPs. As the number of objects which can be attended is limited, they drive other entries out of focus. Hence, the permeability for the out-vector of type-V entries is much higher than for type-S entries. Conversely, the permeability of the in-vector for type-V entries is comparably lower.

Moving disks in the MOT are not very salient, the same physical appearance and the movement make it difficult to differentiate target from distractors. Improved distractor resistance could be implemented by a modified or a more fine-graded selective permeability. Three scenarios are conceivable: First, in-vector permeability is generally reduced, that is, for all kind of entries. As a result, entries which are already in focus are protected. Second, the permeability is selectively reduced only for type-V entries with the same result. Third, the

out-vector permeability for type-V entries is reduced, keeping them in place as new entries can only enter whenever space is available. Above all, the latter seems most plausible, as it is in line with introspection. While concentrating on something, the object of attention is the prominent mental object and not the distractors. Holding something in focus as well as the enhanced ability to specifically ignore distractor furthermore are congruent with the concept that indeed executive functions are enhanced, as both mechanisms have a volitional component. However, meditation is associated with further improved socio-emotional functioning [57]. Especially, with enhanced emotional stability [70], leading to the conclusion that an unspecific decrease of permeability of the attentional membrane is responsible for the distractor resistance. The unspecific decrease furthermore explains why the ability to concentrate on thoughts and feelings generalized into the visual domain.

Integrating the new empirical data in Cowan's model leads to a more sophisticated framework of complex selective attention. The complex model incorporates an elaborated approach for bottom-up as well as top-down effects of salient stimuli on attentional gain mechanisms. In line with previous studies, the complex model provides an account for distributed executive networks, replacing the outdated concept of a unitary central executive. Furthermore, the attentional focus is presented as an executive function exhibiting varying degrees of permeability for more or less reactive memory entries. The model of complex attentional selection proposes an interesting starting point for further research. Its predictions and relevance is discussed in the following section.

3.5. Further approaches arising from the model of complex attentional selection

3.5.1 Automatic and volition attentional processes

As mentioned before, the complex model assumes volitional inhibitory processes, which have not been investigated by one of the four studies, specifically, Study 2 and 3 investigated automatic executive functions. The mindfulness training in Study 4, however,

actually incorporated volitional inhibition, which then generalizes to automatic inhibition manifesting in the attentional focus itself as automatic executive function. The question arises whether automatic attention and volitional attention are basically the same processes with different level of awareness and accuracy.

What was omitted in the complex model was the volitional attention mechanism applied by the participants in Study 4 *during training*, or at least the arrow from brief sensory store to the activated memory. This obviously could be regarded fundamental flaw. The reasons for that is, interpreting the focus of attention as an executive function itself means the volition can be found in the shift of the focus within the activated memory. However, further research is needed to determine if the focus actually can be understood as an executive function or if it is more passive. To put it differently, the permeability of the attention focus (see also below) can be interpreted as an active function of the focus, or alternatively as a passive "physical" attribute, modified by other executive functions as it occurred during mindfulness training. In case that the nature of the focus is much more passive, the complex model would assume a very limited influence of executive functions. Conversely, an active notion of the focus would predict more meta-cognitive influences such as the deliberate perception and modulation of the permanently in short-term intervals.

3.5.2 Permeability of the attentional focus

The concept of a dynamically permeable attentional focus raises the question over which time scale it is permeable and, most importantly, to which degree the permeability might depend on the usage of its' capacity. The permeability was trained by means of mindfulness meditation, implying that it takes time to modify it. Study 4 did not provide any results on how the cognitive load affected performance; it just showed that participants undergoing meditation performed better in the task irrespective of the number of moving disks. Permeability in dependence of load thus has to be further investigated.

Previous mindfulness studies investigating enhanced executive functioning [e.g., 57] also suggest that emotional stability is another crucial factor constituting attentional stability, bringing the influence of affect on the permeability into the complex model. A generally increased permeability, which slowly adapts would predict that meditators would perform better in the MOT even when distractors are salient. Varying permeability for in- and output vectors has already been put forward to explain the enhanced MOT performance of the meditation group. The results challenge furthermore the prevailing capacity perspective, especially against the background of introductory mentioned doubts concerning Lavie's load model (see [5]). In particular, Study 4 shows that capacity is an executive function of short-term memory and consequently might be revisited in favor of a dynamic and reactive conception of the attentional focus. The aforementioned dilution approach, ascribing distractor interference to a dilution of the stimulus display with neutral stimuli, could also refer to an interaction between focus and activated memory; type-V entries could be attached to the attentional membrane, making it unselectively permeable for all kinds of stimuli. Conversely, type-S entries could also potentially modulate the permeability or make the focus selectively permeable. Figuratively speaking, whenever a type-S entry is attached from the inside the general permeability decreases, or it becomes semi-permeable. Whenever a type-S entry is attached from the outside or surpasses the membrane once, it becomes selectively or permeable for salient stimuli. This notion of focus and affect could furthermore account for over-shadowing effects in studies showing pictures of different affect in a randomized order. This hypothesis could for example be investigated by parametrically presenting participants with affective pictures in an n-back task. The model of complex attentional selection would predict that whenever a stimulus is processed in-depth, as indexed by correct identification in the n-back task, the reported affect varies as function of n.

3.5.3 The model and the negativity bias

The model can be potentially applied to explain the observed affective related mechanism on a broader scale. The automatic attentional gain has led to the conclusion that the content of brief sensory store is modulated by an evolutionary amplifier. The purpose of the study was, however, to investigate attentional gain mechanism in response to motivational stimuli as opposed likewise positive and arousing stimuli, which were less appealing. As a result, the motivational relevant stimuli capture automatically attention. Positive, high approach stimuli normally get the same little attention as neutral ones, when negative stimuli are included in the set. The study concluded that the so-called 'negativity bias' corresponds more closely to a motivational bias. Two possible mechanisms might account for this effect. As hypothesized above, the permeability of the attentional focus is variable, potentially in a much shorter time rage. Extremely salient type-S entries might change the permeability for less salient type-S entries as well as type-V entries. Alternatively, motivational stimuli remain due to their salience even after presentation in the activated memory. The conventional view of short-term memory denotes that if the capacity is limited, the remaining items occupy space and thus reduce the probability that a less salient item is called by the attentional focus or extensively attended. From an emotional perspective, the later seems a bit too far-fetched. In a similar vein, further data analysis revealed that state negative affect influences attentional gain processes even to positive stimuli as well [71]. Hence, it appears that further emotional system meditates between elicited affect and adjustment of attentional focus favoring the first proposed mechanism. The reactivity of emotion-regulation systems processing the affect elicited by visual stimuli has been outlined in Study 2. This system is furthermore potentially accountable for the memory reactivity, evaluation long-term memories on a broader time-scale.

3.5.4 Long-term memory guiding attention – a broader picture

One of the key features of the revisited model is that accessibility of memory crucially depends on network properties, in particular on the cohesion. Cohesion, in turn, varies as function of general or personal semantic knowledge.

This implies that information, which previously could easily be switched into an active state might become less available whenever it becomes part of a larger personal semantic network. The accessibility could be investigated by beguiling two groups of participants into doing either something socially and personally acceptable or unacceptable. After the event and giving the participants some time to consolidate it, the "bad group" should have problems to recall the event in detail as objectively compared to the "good group."

Furthermore, the concept of attentional gain mechanisms orchestrated by long-term memories could recapture a fresh vision for other disciplines in psychological science. Among individual differences, experiences, and expectations, there are among further differences also cultural factors, which modulate attentional processes. All of them manifest in long-term memories and thus likewise could modulate "attentional habits." East Asians and Westerners differ with respect to their processing style of complex visual stimuli. Whereas East Asians seem to see the broader pictures and integrate contextual information from the background, Westerners show a preference for focal information, while ignoring peripheral information. The possible reasons for these contrasts invoked by the authors come from a broad field of (psychological) science and exemplify the fact, that attention is not a single, isolated mechanism, but a multidimensional construct. Cultural characteristics are often hypothesized to play a major role although a study by McKone and collogues [72] raises doubts. Generally, it is assumed that East Asian cultures are more collectivist, facilitating the incorporation of context, contrary to individualistic Western cultures (for complete account see [72, 73]). Specifically, the feeling of belonging to and depending on a group modulates the P1 event-related potential in global/local spatial attentional processing. Genetic

predispositions also might play a major role in attentional biases. However, a distinct mechanism could not be identified, yet. Two other factors mentioned in the study shaping a certain processing style do not come to one's mind at first, however, on closer inspection, their influence is apparently striking: Physical environment and language acquisition. East Asian cities are densely populated and heavily built-up, the environment thus is visually more complex - for example, if you compare Tokyo with New York City. Langue might be an influential factor, as acquisition by English-speaking toddlers is more object-directed, potentially facilitating a local bias, that is the visual sensitivity for details of a scene.

Self-referentiality of contextual information might generally modulate the way how a complex scene is visually explored (Other modalities should be taken into consideration as well). Long-term memory properties as executive functions account furthermore for attentional gain in response to new desire for stimuli, which is not captured by motivational relevance in terms of an evolutionary advantage. Imagine you wish for a new smartphone or a new car. Instantly, you see or hear what you want everywhere. Late-attentional selection and thereby subconscious semantic processing is refined according to the goals in your personal semantic knowledge, which now includes a new desire. That is basically the principle behind the well-known cocktail-party effect.

3.6 Future directions for meditation research

Meditation research is still in its infancy; most approaches are not based on longitudinal paradigms. Therefore Study 4 might be of particular importance for the field as it allows to address currently unanswered questions. Previous studies have provided inconclusive results regarding the role of expert networks. Both increase as well as decrease of brain activity are likewise associated with meditation and mindfulness. The effects of mediation are mostly unknown on a neuronal level. Hence, on basis of Study 4, a first, draft of the underlying neurophysiological changes is outlined in the following paragraph.

Although improved well-being and enhanced executive control of attentional functions are core features of mindfulness, their relationship or mutual dependency remains unknown. Different possible scenarios for the development of attentional control and emotion regulation are thus furthermore discussed.

3.6.1 Meditation and expert networks

Structural as well as functional changes have previously been hypothesized to underlie the various changes in cognitive performance and emotional functioning [74]. However, it has been unclear whether increases in activity in associated brain regions or a rather decreases modulate these improvements. As aforementioned, the SSVEP amplitude is proportional to the amount of resources a network or conjoint networks allocate to meet the demands of the task at hand adequately. The reduction of amplitude thus suggests that resources are utilized in a more efficient way, an assumption which previously has been raised by EEG studies [75]. The measured SSVEP could, like other EEG signals such as the error-related negativity (ERN) [57] actually originate from the anterior cingulate cortex (ACC). The ACC is involved in cognitive and affective processing, a functional differentiation which also manifests in distinct anatomical correlates within the structure [76]. Neuroplastic changes in the ACC thus might account for both improved attentional performance and, through its interconnectivity with limbic structures [77, 78, 79], enhanced well-being. Using diffusion tensor imaging (DTI) it has been shown that short-term meditation facilitates a reduction of axonal density in the ACC as measured by radial diffusivity [80]. Although it is speculative, it could be this very effect that manifests itself in reduced SSVEP-amplitude. Reduced white matter integrity in the ACC has previous been observed in clinical studies and might predispose depression [81]. Hence, this theory would also account for the enhanced negative and decreased positive state affect we observed in mindfulness group. Besides that, within the mindfulness framework, a reduction in rostral sections of the ACC seems to be highly likely, as it

previously has been observed when negative stimuli had to be ignored [82]. A skill, which is explicitly trained by mindfulness meditation.

At later stages of meditation, the decrease of axonal density is complemented by an increase in white matter efficiency in the corona radiata (dorsal ACC/ dACC) as indexed by fractional anisotropy [83]. The corona radiata is crucial for the ACC's interconnectivity [84] and establishes communication with regions involved in affect as wells as executive control [85, 86 ,87]. Although it is part of ACC's cognitive division [76] it has been argued that one of the main function of the dACC is to monitor ongoing behavior and motivating adjustment, predominantly in response to negative affect [87]. In summary, these two structural changes in the ACC associated with affective and cognitive functions follow a different time course and thus promote enhanced attentional skills before they promote well-being.

3.6.2 Attention and Affect

Although numerous researchers are dedicated to unravel the functional and structural changes associated with mindfulness training, the understanding of the underlying psychological and neural mechanisms is currently limited. The fundamental components that constitute the concept of mindfulness, generally find consensus among researchers, however, with slightly varying notions. The first key element of mindfulness are superior attentional skills, including executive control, respectively [57, 75, 88]. The second and third elements, which are emotion regulation and self-awareness, are often not clearly delimited. Enhanced emotion regulation is thought to be a major result of mindfulness training and often simply defined as decreased negative and increased positive affect. These changes in affective processing, in turn, are thought to result in an altered self-awareness [88]. Furthermore, improved affective processing can manifest as a non-judgmental attitude towards one's mental and emotional states, that is, letting emotions pass without engaging in in-depth affective, and

cognitive processing. The sole tagging of emotional and mental states thus is a form of emotion regulation as well as an active change of self-perception or self-awareness.

Whether the development of attentional skills and emotion regulation is sequential or occurs in parallel, with possible mutual dependence, remains unclear [57], regarding the enhanced executive control as a direct result of increased emotion regulation abilities, specifically emotional acceptance. Other researchers conversely assume that superior attentional skills are a precondition for the development of an enhanced emotion regulation [74, 75, 89] or that they, as aforementioned, develop in parallel [88]. Additionally, a study by Kalisch and colleagues [90] provides further evidence for a negligible role of attentional skills in emotion regulation. They demonstrate that not being attached to one's feelings and denying their personal relevance has also in a non-mindfulness training setting a positive impact on affective processing [84]. Without any further attentional training, as in meditation, this strategy markedly reduces physiological reactivity as well as a subjective experience of pain and anxiety - an effect often claimed by mindfulness methods. Hence, the quality of emotion regulation achieved through mindfulness training could, at least to some extent, be independent of the development of attentional skills.

These findings are insofar even more remarkable as the brain regions, which are associated modulation of affective processing, namely medial prefrontal/anterior cingulate and anterolateral prefrontal cortex, are part of the network also being "refurbished" by mindfulness training [91]

The manifold neuronal changes which accompany mindfulness training range from adaption of causal brain relations [88], sustained activity [91, 92, 93] as well as diminished activity, increased efficacy of involved networks [94, 95, 96] and various white matter changes [96]. Nevertheless, the very neuronal mechanisms and structural changes ultimately promoting improved affective and cognitive functioning are far from being understood, rendering any knowledge of the functional and structural changes trivial (see [97, 98]).

Aside from the afore-discussed neural mechanism underlying the beneficial effect of mindfulness training, the functional interplay between cognitive and affective improvements remains debatable. On a behavioral level, our study supports the assumptions that enhanced attentional skills develop independently from emotional skills and thus might lay the foundation for higher mindfulness skills such as self-referential processing and meta-awareness. This theory also explains the fact that PRM training had no substantial effect as it is aimed at directly reducing negative emotions without the detour through the attentional domain. However, past research has come to different conclusions leaving three mutually exclusive theories, which could account for the interplay of increased attentional control and well-being.

Firstly, attentional control could be a requirement for an improved emotion regulation as to suitably deal with upcoming feelings. They must surpass the perceptual threshold and most important in the following correctly been identified. Mindfulness training might lower the level of this threshold. Subsequently, feelings are subject to regulation processes, that is, adaption of behavior.

Secondly, a model with less unidirectional relationship proposed by Tang and colleagues (2015) assumes that attentional control and emotion regulation develop in parallel with altered self-awareness (e.g., diminished self-reverential processing), but interact closely and thus constitute enhanced self-regulation.

A third alternative is that optimized attentional processes are actually a byproduct of the enhanced emotion regulation at least with respect to sustained spatial attention. Strong feelings of fear, anger, and desire shrink the attentional focus and thus prevent peripheral information from being further encoded [22, 99, 100]. Meditation specifically aims at reducing the impact of this subset of emotions on the practitioner's mind and thus could foster a wider attentional focus. This effect might, in turn, explain a better performance in tasks related to spatial attention. The effect could also be more generalized as attentional and

emotional processes compete for resources [76, 100, 101]. Emotional detachment (see diminished self-referential processing) would give attentional processes free rein.

However, our behavioral data implies a predominantly sequential order in the formation of enhanced attentional and emotional processes. Participants in the meditation group exhibit higher scores in the MOT task while affective measurements were not affected. It seems plausible that emotion regulation as wells as emotional detachment might further boost attentional processes and vice versa at more advanced stages of meditation. Using a Stroop paradigm, a cross-sectional study testing meditation experts identifies emotional acceptance as the primary driving factor in enhanced executive control through meditation [57].

An explanation for this at first sight counterintuitive results can be derived from a differentiated consideration of structural changes in other brain regions than the ACC associated with emotion regulation. Expert meditators exhibit a diminished activity in frontal networks ([102]), especially in the medial prefrontal cortex (mPFC), which is associated with emotion regulation. The mPFC is linked to the interoceptive perception of fear and imposes regulatory function on limbic systems in case negative emotions need to be suppressed [103]. A diminished activity, occurring after long mindfulness training, thus might indicate less enforcement in emotion regulation and acceptance of (negative) emotions [97] as meditation should facilitate a detached emotional processing style without any further commitment to one's own emotions [57]. Alternatively, less neuronal reactivity could also indicate a more efficient use of cognitive resources and a higher clarity of subtle interoception. Interestingly, in new meditators with six weeks of training the activity in the mPFC initially seems to increase, which might account for the greater awareness of negative emotions.

The findings again highlight the need for carefully controlled longitudinal studies as they evince shifts and changes in affective processing accompanying mindfulness training as well as the ongoing complex structural changes, whose dynamics still remain unknown.

However, using an active control group, it becomes clear that the positive effects of mindfulness training are specific to this form of training. Although PMR training resembles mindfulness in many aspects, especially paying attention to bodily states, its beneficial effects do not generalize in other cognitive domains and are not accompanied by structural changes in the brain.

Furthermore, they bear significant implications for clinical applications of mindfulness-based treatments. Enhanced sensitivity towards one's negative feelings or mental states without any further therapeutic counseling might also result in a "disimprovement." Scientists who want to conduct mindfulness research should be aware of the fact that at first the participants' emotional balance might also be negatively affected.

3.7 Thoughts on volition and the central executive

At the beginning of this chapter it is stated that the central executive is not a unitary complex or system, but an emergent product. It has been abolished without replacement. Instead, its functions were reduced to network properties. The central executive is regarded as an emergent product of non-individualistic processes. Nevertheless, the revisited model does not go without terms and concept such as 'volitionally attended.' The same terminology might lead to confusion or the assumption that the central executive is implicitly assumed, but just not depicted. In particular because whenever entries are called which are not salient, some extra effort seems to be needed. In Study 3, volitional attentional and mental processes are presumed, resolving conflicts in general semantic knowledge. Following Cowan and Baddeley would more or less imply that in response to a dissonant stimulus the central executive as a single process is in charge. It actively combs semantic memory and applies conflict resolution strategies. The main difference to automatic processing seems to be the level of awareness, but that does not necessarily mean that the mechanisms differ fundamentally. If somebody asks: "What was your first car?", You might have a clear image

of it. The color, steering wheel, where it always parked and further details. Thinking about the car might fall under volitional remembering. Conversely, when somebody says, "Do not think of a pink elephant.", You still might automatically think of an elephant; you can hardly stop your brain from creating an image. Here, the main difference seems to be that thinking of the car is facilitated whereas thinking of the elephant is inhibited, although in both scenarios the activation is automatic. As most of the brains connections are of inhibitory nature volition (or free-will) is often regarded as the ability to suppress behavior - a free won't. However, even this view is challenged as last-moment inhibition seems to depend on unconscious preparatory neural activity [e.g., 104].

Due to lacking evidence, meanwhile, the focus of attention itself has gained the status of an executive function for selective attention [64, 65] striking up a swansong for the unitary central executive [64]. According to Logie the question what controls the focus still remains unanswered. The answer proposed in this dissertation would be itself. It is a self-organizing system.

Comparing the original and the complex model it seems plausible against the background of contemporary scientific literature to cut the central executive in favor of a decentralized view of attention and working memory. The revisited model continues Cowan's state model approach and reduced executive functions to network properties. However, both models are analogies and basically, rely on similar data and conclusion from other experiments. A popular ploy to decide which theory is most likely to account for an observed phenomenon is Occam's razor - a simpler theory should be preferred over a more complex one. Alternatively, fewer boxes is better than more boxes as more boxes make a theory more complex decreasing its testability.

From a neuroscientific perspective, the hierarchy of top-down controlling processes cannot go beyond infinity. We are prone to think that in the end, the superordinate mind controls the physical realm. The concept of mental causation poses a problem for

psychological science, well, at least if you think it is relevant to it. For a complete overview, please see Kim [105]. In short, he states that assuming that a mind and brain two different "things," so-called property dualism, and mental events are distinct from physical ones violates the principle of physical closure: The physical domain is causally closed, self-sufficient and does not require or allow influence from outside of the domain. As long this principle holds, and the mind is not something outside of the physical domain, mental causation is not possible. Even if the mind is outside the physical realm, an explanation is needed on how mind and matter interact. The following related problem is how a mental event causes another mental event. If mental events rely on physical events, a mental event must cause a physical event, which in turn instantiates the next mental event (*Figure 6*). Mental to mental causation thus relies on mental to physical causation, which contradicts the principle of physical causal closure. Unless this principle is not discarded, mental to mental and mental to physical causation are not possible. Discarding it would render the physical realm more or less unimportant as mental events would be somewhere else, but not in this world, which does not sound like a scientific or somehow appealing concept.

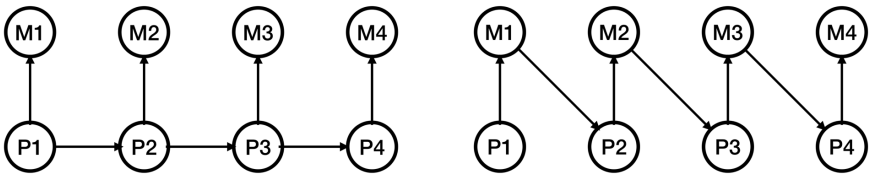

Figure 6: Processing diagrams of mental to physical causation (*right*) and epiphenomenalism (*left*)

Abandoning mental efficacy either leads to physical monism or epiphenomenalism. Epiphenomenalism is a concept according to which mental events completely rely on physical events and are caused by them, however, they do not have any causal efficacy and just appear. Physical monism or physicalism denies any form of dualism and reduced, for example, pain to C-fibre activity, there is nothing over and above. Physicalism likewise runs into problems, like the explanatory gap. We could know everything about C-fibres or photoreceptors in the

human eye and gather all available physical information about them, we still are not able to determine which color an individual would see or what the qualia is like. Furthermore, there is no need for this sensation of everything is purely physical. The patellar or a pain reflex would work with or without a sensation of pain and could be self-sufficiently explains by its functional wiring. This brief outline makes clear that there is no simple solution to the mind-body problem and hence the efficacy of executive functions.

3.8 Concluding remarks

Conventional approaches to selective attention conceptualize it as a perceptual filter, prioritizing relevant and ignoring irrelevant information at distinct stages of the sensory information stream. The purpose of this filter mechanism is to promote efficient behavior. The present dissertation aimed at developing a timely, broader and more complete picture of complex attentional selection. Taking up Cowan's and Kandel's basic idea to understand attention as an integrative process, four studies were employed to investigate different mechanism and systems along the visual processing stream involved in creating phenomenological consciousness. Maybe James was right from the beginning saying "*Attention is taking possession of the mind*.". However, it seems more like attention is the mind. At least some manifestations of it. It is a window to our phylogenetic past, doing its duty the same way it did for over hundreds of thousands of years hand in hand with the motivational system.

It takes possession of us in a way we do not recognize. Attention automatically chooses information from the sensory processing stream, which it thinks to be good for us and could be subject to semantic integration processes and suppresses anything else. All for the greater good of our psyche. Meditation has proven to be an effective tool to tame attention, showing that attention manifest as a function of visual short-term memory: Enhancing selective attention, or reducing distractor interference, in turn furthermore enhances visual-

short term memory. Attention seems to be skittish, a jack of all trades, putting it to rest might reveal even more about the cognitive and emotional mechanisms it modulates or it uses for its own purposes.

4.0 References

[1] Gazzaniga, M. S., Ivry, R. B., & Mangun, G. R. (1998). *Cognitive Neuroscience: The Biology of the Mind*. New York: WW Norton & Co.

[2] Ratz, D., Scheffler, J., Seese, D., & Wiesenberger, J. (2014). *Grundkurs Programmieren in Java*. Carl Hanser Verlag GmbH Co KG.

[3] Broadbent, D. E. (1958). *Perception and communication*. New York: Oxford University Press.

[4] Deutsch, J. A., & Deutsch, D. (1963). Attention: Some theoretical considerations. *Psychological Review, 70*(1), 80-90. http://dx.doi.org/10.1037/h0039515

[5] Lavie, N., & Tsal, Y. (1994). Perceptual load as a major determinant of the locus of selection in visual attention. *Attention, Perception, & Psychophysics, 56*(2), 183-197.

[6] Benoni, H., & Tsal, Y. (2013). Conceptual and methodological concerns in the theory of perceptual load. *Frontiers in Psychology*, 4.

[7] Cowan, N. (1995). Oxford psychology series, No. 26. *Attention and memory: An integrated framework*. New York: Oxford University Press.

[8] Campbell, J., & Moyers, B. (2011). *The power of myth*. New York: Anchor Books.

[9] Pfeffer, J. I., & Nir, S. (2000). *Modern physics: an introductory text*. London: World Scientific.

[10] European Space Agency (ESA). (2013). *Planck reveals an almost perfect universe*. Retrieved from http://m.esa.int/Our_Activities/Space_Science/Planck/Planck_reveals_an_almost_perfect_Universe

[11] Bear, M. F., Connors, B. W., & Paradiso, M. A. (2007). *Neuroscience: Exploring the brain,* 3rd ed. Philadelphia: Lippincott Williams & Wilkins.

[12] Dawkins, R. (2006). *The God Delusion*. London: Bantam Press.

[13] Sekulovski, D. (2013). *Studies in ambient intelligent lighting.* Eindhoven: Technische Universiteit Eindhoven DOI: 10.6100/IR752369

[14] Bok, M. J., Porter, M. L., Place, A. R., & Cronin, T. W. (2014). Biological sunscreens tune polychromatic ultraviolet vision in mantis shrimp. *Current Biology, 24*(14), 1636-1642.[15]

[15] Marshall, J., & Oberwinkler, J. (1999). Ultraviolet vision: The colourful world of the mantis shrimp. *Nature, 401*(6756), 873-874.

[16] Wilhelm Haidinger: *Ueber das directe Erkennen des polarisirten Lichts und der Lage der Polarisationsebene*. In: Barth, J.A. (1844). Annalen der Physik. Band LXIII, ISSN 0003-3804, S. 29–39. Leipzig.

[17] Van Voorhis, S., & Hillyard, S. A. (1977). Visual evoked potentials and selective attention to points in space. *Attention, Perception, & Psychophysics, 22*(1), 54-62.

[18] Deffke, I., Sander, T., Heidenreich, J., Sommer, W., Curio, G., Trahms, L., & Lueschow, A. (2007). MEG/EEG sources of the 170-ms response to faces are co-localized in the fusiform gyrus. *Neuroimage, 35*(4), 1495-1501.

[19] Ghuman, A. S., Brunet, N. M., Li, Y., Konecky, R. O., Pyles, J. A., Walls, S. A., ... & Richardson, R. M. (2014). Dynamic encoding of face information in the human fusiform gyrus. *Nature communications, 5*, 5672.

[20] Kiefer, M. (2002). The N400 is modulated by unconsciously perceived masked words: Further evidence for an automatic spreading activation account of N400 priming effects. *Cognitive Brain Research, 13*(1), 27-39. https://doi.org/10.1016/S0926-6410(01)00085-4

[21] Kutas, M., & Hillyard, S. A. (1982). The lateral distribution of event-related potentials during sentence processing. *Neuropsychologia, 20*(5), 579–590. http://doi.org/10.1016/0028-3932(82)90031-8

[22] Kuhr, B., Schomberg, J., Gruber, T., & Quirin, M. (2013). Beyond pleasure and arousal: appetitive erotic stimuli modulate electrophysiological brain correlates of early attentional processing. *NeuroReport, 24*(5), 246-250.

[23] Hillyard SA, Vogel EK, Luck SJ. Sensory gain control (amplification) as a mechanism of selective attention: electrophysiological and neuroimaging evidence. *Philos Trans R Soc Lond B Biol Sci 1998,* 353:1257–1270.

[24] Müsseler, J. (2008). *Allgemeine Psychologie, 2.*, neu bearb. Aufl., Berlin: Spektrum.

[25] Pollmann, S. (2008). *Allgemeine Psychologie* (Vol. 8391). UTB.

[26] Harmon-Jones, E., & Gable, P. A. (2009). Neural activity underlying the effect of approach-motivated positive affect on narrowed attention. *Psychological Science, 20*(4), 406-409.

[27] Ward, J. (2015). *The student's guide to cognitive neuroscience*. New York: Psychology Press.

[28] Harmon-Jones, E., & Gable, P. A. (2017). On the role of asymmetric frontal cortical activity in approach and withdrawal motivation: An updated review of the evidence. *Psychophysiology*. 2018;55:e12879. https://doi.org/10.1111/psyp.12879

[29] Brandstätter, V., Schüler, J., Puca, R. M., & Lozo, L. (2013). *Motivation und Emotion: Allgemeine Psychologie für Bachelor*. Berlin Heidelberg: Springer-Verlag.

[30] Schöne, B., Wessels, M., & Gruber, T. (2017). Experiences in Virtual Reality: a Window to Autobiographical Memory. *Current Psychology*, 1-5.

[31] Larraz Mora, T. (2012, July 20). *Game of Thrones' Martin: I like my characters to suffer.* Reuters. Retrieved from https://uk.reuters.com/article/uk-books-author-georgemartin/game-of-thrones-martin-i-like-my-characters-to-suffer-idUKBRE86J15220120720

[32] Ito, T. A., Larsen, J. T., Smith, N. K., & Cacioppo, J. T. (1998). Negative information weighs more heavily on the brain: the negativity bias in evaluative categorizations. J*ournal of personality and social psychology, 75*(4), 887.

[33] Bradley, M. M., Codispoti, M., Cuthbert, B. N., & Lang, P. J. (2001). Emotion and motivation I: defensive and appetitive reactions in picture processing. *Emotion, 1*(3), 276.

[34] Carver, C. S., & Harmon-Jones, E. (2009). Anger is an approach-related affect: evidence and implications. *Psychological bulletin, 135*(2), 183.

[35] Pfurtscheller, G., Stancak, A., & Neuper, C. (1996). Event-related synchronization (ERS) in the alpha band—an electrophysiological correlate of cortical idling: a review. *International journal of psychophysiology, 24*(1), 39-46.

[36] Laufs, H., Holt, J. L., Elfont, R., Krams, M., Paul, J. S., Krakow, K., & Kleinschmidt, A. (2006). Where the BOLD signal goes when alpha EEG leaves. *Neuroimage, 31*(4), 1408-1418.

[37] Doesburg, S. M., Bedo, N., & Ward, L. M. (2016). Top-down alpha oscillatory network interactions during visuospatial attention orienting. *Neuroimage, 132*, 512-519.

[38] Ray W, Cole H (1985) EEG alpha activity re ects attentional demands, and beta activity re ects emotional and cognitive pro- cesses. *Science 228*(4700):750–752

[39] Klimesch, W., Sauseng, P., & Hanslmayr, S. (2007). EEG alpha oscillations: the inhibition–timing hypothesis. *Brain research reviews, 53*(1), 63-88.

[40] Nunez, P. L., & Srinivasan, R. (2006). A theoretical basis for standing and traveling brain waves measured with human EEG with implications for an integrated consciousness. *Clinical Neurophysiology, 117*(11), 2424-2435.

[41] Schöne, B., Schomberg, J., Gruber, T., & Quirin, M. (2016). Event-related frontal alpha asymmetries: electrophysiological correlates of approach motivation. *Experimental brain research, 234*(2), 559-567. https://doi.org/10.1007/s00221-015-4483-6

[42] Kazanjian, H. (Producer), & Marquand, R. (Director). (1983). *Star Wars: Episode VI – Return of the Jedi* [Motion picture]. USA: Lucasfilm Ltd.

[43] Desimone, R. (1998). Visual attention mediated by biased competition in extrastriate visual cortex. *Philosophical Transactions of the Royal Society of London B: Biological Sciences, 353*(1373), 1245-1255.

[44] Hewig J. Intentionality in frontal asymmetry research. *Psychophysiology*. 2018; 55:e12892. https://doi.org/10.1111/psyp.12852

[45] Greenwald, A. G. (1980). The totalitarian ego: Fabrication and revision of personal history. *American Psychologist, 35*(7), 603–618. http://doi.org/10.1037/0003-066X.35.7.603

[46] Renoult, L., Davidson, P. S. R., Palombo, D. J., Moscovitch, M., & Levine, B. (2012). Personal semantics: at the crossroads of semantic and episodic memory. *Trends inCognitive Sciences, 16*(11), 550–558. http://doi.org/10.1016/j.tics.2012.09.003

[47] Renoult, L., Tanguay, A., Beaudry, M., Tavakoli, P., Rabipour, S., Campbell, K., … Davidson, P. S. (2016). Personal semantics: Is it distinct from episodic and semantic memory? An electrophysiological study of memory for autobiographical facts and repeated events in honor of Shlomo Bentin. *Neuropsychologia, 83*, 242-256. http://doi.org/10.1016/j.neuropsychologia.2015.08.013

[48] Conway, M. A. (2005). Memory and the self. *Journal of Memory and Language, 53*(4), 594–628. http://doi.org/10.1016/j.jml.2005.08.005

[49] Conway, M. A., Singer, J. A., & Tagini, A. (2004). The Self and Autobiographical Memory: Correspondence and Coherence. *Social Cognition, 22*(5), 491–529. http://doi.org/10.1521/soco.22.5.491.50768

[50] Price, J., & Davis, B. (2008). *The Woman who Can't Forget: The Extraordinary Story of Living with the Most Remarkable Memory Known to Science: a Memoir*. New York: Simon and Schuster.

[51] Martens, U., Trujillo-Barreto, N., & Gruber, T. (2011). Perceiving the tree in the woods: segregating brain responses to stimuli constituting natural scenes. *Journal of Neuroscience, 31*(48), 17713-17718.

[52] Easwaran, E. (2006). *Dhammapada: Buddhas zentrale Lehren*. München: Wilhelm Goldmann Verlag.

[53] Schumann, H. W. (2000). *Handbuch Buddhismus. Die zentralen Lehren: Ursprung und Gegenwart*. München: Diederichs.

[54] Hanh, T. N. (2012). *Körper und Geist in Harmonie: die Heilkraft buddhistischer Psychologie*. München: Kösel-Verlag.

[55] Lutz, A., Greischar, L. L., Rawlings, N. B., Ricard, M., & Davidson, R. J. (2004). Long-term meditators self-induce high-amplitude gamma synchrony during mental practice. *Proceedings of the National academy of Sciences of the United States of America, 101*(46), 16369-16373.

[56] Jacobson, E. (1938). *Progressive relaxation: A physiological and clinical investigation of muscular state and their significance*. Chicago: University of Chicago Press

[57] Teper, R., & Inzlicht, M. (2012). Meditation, mindfulness and executive control: the importance of emotional acceptance and brain-based performance monitoring. *Social cognitive and affective neuroscience, 8*(1), 85-92.

[58] Makovski, T., & Jiang, Y. V. (2007). Distributing versus focusing attention in visual short-term memory. *Psychonomic Bulletin & Review, 14*(6), 1072–1078. http://doi.org/10.3758/BF03193093

[59]Lamme, V. A. (2003). Why visual attention and awareness are different. Trends in cognitive sciences, 7(1), 12-18.

[60] Kentridge, R. W., Heywood, C. A., & Weiskrantz, L. (2004). Spatial attention speeds discrimination without awareness in blindsight. Neuropsychologia, 42(6), 831-835.

[61]Tallon-Baudry, C. (2004). Attention and awareness in synchrony. Trends in cognitive sciences, 8(12), 523-525

[62]Tallon-Baudry, C., Bertrand, O., Hénaff, M. A., Isnard, J., & Fischer, C. (2004). Attention modulates gamma-band oscillations differently in the human lateral occipital cortex and fusiform gyrus. Cerebral Cortex, 15(5), 654-662.

[63] Baddeley, A. (2007). *Working memory, thought, and action* (Vol. 45). OUP Oxford.

[64] Logie, R. H. (2016). Retiring the central executive. *The Quarterly Journal of Experimental Psychology, 69*(10), 2093-2109.

[65] Logie, R. H., & Cowan, N. (2015). Perspectives on working memory: introduction to the special issue. *Memory & Cognition, 43*(3), 315-324.

[66] Baddeley, A., & Sala, Della, S. (1996). Working memory and executive control. *Philosophical Transactions of the Royal Society B: Biological Sciences, 351*(1346), 1397–1404.

[67] Méndez-Bértolo, C., Moratti, S., Toledano, R., Lopez-Sosa, F., Martínez-Alvarez, R., Mah, Y. H., ... & Strange, B. A. (2016). A fast pathway for fear in human amygdala. *Nature neuroscience, 19*(8), 1041-1049. http://doi.org/10.1038/nn.4324

[68] Darwin, C. (1872). *The origin of species: By means of natural selection or the preservation of favored races in the struggle for life* (Vol. 1). New York: Modern library.

[69] Atkins, P. W., & Atkins, P. W. (1992). *The elements of physical chemistry* (Vol. 496). Oxford United Kingdom: Oxford University Press.

[70] Malinowski, P. (2013). Neural mechanisms of attentional control in mindfulness meditation. *Frontiers in neuroscience*, 7.

[71] Schomberg, J., Schöne, B., Gruber, T., & Quirin, M. (2016). Emotion and hypervigilance: negative affect predicts increased P1 responses to non-negative pictorial stimuli. *Experimental brain research, 234*(6), 1395-1402. https://doi.org/10.1007/s00221-015-4544-x

[72] McKone, E., Aimola Davies, A., Fernando, D., Aalders, R., Leung, H., Wickramariyaratne, T., & Platow, M. J. (2010). Asia has the global advantage: Race and visual attention. *Vision Research, 50*(16), 1540–1549. http://doi.org/10.1016/j.visres.2010.05.010

[73] Lin, Z., Lin, Y., & Han, S. (2008). Self-construal priming modulates visual activity underlying global/local perception. *Biological Psychology, 77*(1), 93–97. http://doi.org/10.1016/j.biopsycho.2007.08.002

[74] Allen, M., Dietz, M., Blair, K. S., van Beek, M., Rees, G., Vestergaard-Poulsen, P., et al. (2012). Cognitive-Affective Neural Plasticity following Active-Controlled Mindfulness Intervention. *The Journal of Neuroscience*, *32*(44), 15601–15610. http://doi.org/10.1523/JNEUROSCI.2957-12.2012

[75] Moore, A., Gruber, T., Derose, J., & Malinowski, P. (2012). Regular, brief mindfulness meditation practice improves electrophysiological markers of attentional control. *Frontiers in human neuroscience,* 6. http://doi.org/10.3389/fnhum.2012.00018/abstract

[76] Bush, G., Luu, P., & Posner, M. I. (2000). Cognitive and emotional influences in anterior cingulate cortex. *Trends in Cognitive Sciences*, *4*(6), 215–222. http://doi.org/10.1016/S1364-6613(00)01483-2

[77] Fox, K. C. R., Nijeboer, S., Dixon, M. L., Floman, J. L., Ellamil, M., Rumak, S. P., et al. (2014). Is meditation associated with altered brain structure? A systematic review and meta-analysis of morphometric neuroimaging in meditation practitioners. *Neuroscience & Biobehavioral Reviews*, 48–73. http://doi.org/10.1016/j.neubiorev.2014.03.016

[78] Hölzel, B. K., Ott, U., Hempel, H., Hackl, A., Wolf, K., Stark, R., & Vaitl, D. (2007). Differential engagement of anterior cingulate and adjacent medial frontal cortex in adept meditators and non-meditators. *Neuroscience Letters*, *421*(1), 16–21. http://doi.org/10.1016/j.neulet.2007.04.074

[79] Tang, Y. Y., Ma, Y., Wang, J., Fan, Y., Feng, S., Lu, Q., ... & Posner, M. I. (2007). Short-term meditation training improves attention and self-regulation. *Proceedings of the National Academy of Sciences, 104*(43), 17152-17156. http://doi.org/10.1073/pnas.0707678104

[80] Tang, Y.-Y., Lu, Q., Fan, M., Yang, Y., & Posner, M. I. (2012a). Mechanisms of white matter changes induced by meditation. *Proceedings of the National Academy of Sciences of the United States of America*, *109*(26), 10570–10574. http://doi.org/10.2307/41602901?ref=no-x-route:1e18f261f17f08ff98438fde3bb79bef

[81] Alexopoulos, G. S., Murphy, C. F., Gunning-Dixon, F. M., Latoussakis, V., Kanellopoulos, D., Klimstra, S., ... & Hoptman, M. J. (2008). Microstructural white matter abnormalities and remission of geriatric depression. *American Journal of Psychiatry, 165*(2), 238-244. http://doi.org/10.1176/appi.ajp.2007.07050744

[82] Vuilleumier, P., Armony, J. L., Driver, J., & Dolan, R. J. (2001). Effects of Attention and Emotion on Face Processing in the Human Brain An Event-Related fMRI Study. *Neuron*, *30*(3), 829–841. http://doi.org/10.1016/S0896-6273(01)00328-2

[83] Tang, Y. Y., Lu, Q., Geng, X., Stein, E. A., Yang, Y., & Posner, M. I. (2010). Short-term meditation induces white matter changes in the anterior cingulate. *Proceedings of the National Academy of Sciences*, *107*(35), 15649–15652. http://doi.org/10.1073/pnas.1011043107

[84] Tang, Y.-Y., Tang, R., & Posner, M. I. (2016). Mindfulness meditation improves emotion regulation and reduces drug abuse. *Drug and Alcohol Dependence*, *163*, S13–S18. http://doi.org/10.1016/j.drugalcdep.2015.11.041

[85] Pessoa, L. (2008). On the relationship between emotion and cognition. *Nature Publishing Group*, *9*(2), 148–158. http://doi.org/10.1038/nrn2317

[86]Shackman, A. J., Salomons, T. V., Slagter, H. A., Fox, A. S., Winter, J. J., & Davidson, R. J. (2011). The integration of negative affect, pain and cognitive control in the cingulate cortex. *Nature Reviews Neuroscience, 12*(3), 154-167. http://doi.org/10.1038/nrn2994

[87] Spunt, R. P., Lieberman, M. D., Cohen, J. R., & Eisenberger, N. I. (2012). The Phenomenology of Error Processing: The Dorsal ACC Response to Stop-signal Errors Tracks Reports of Negative Affect. *Journal of Cognitive Neuroscience*, *24*(8), 1753–1765.

[88] Tang, Y. Y., & Tang, R. (2015). Rethinking Future Directions of the Mindfulness Field. *Psychological Inquiry*. http://doi.org/10.1080/1047840X.2015.1075850

[89] Moore, A., Gruber, T., Derose, J., & Malinowski, P. (2012b). Regular, brief mindfulness meditation practice improves electrophysiological markers of attentional control. *Frontiers in Human Neuroscience*, *6*. http://doi.org/10.3389/fnhum.2012.00018

[90] Kalisch, R., Wiech, K., Critchley, H. D., Seymour, B., O'doherty, J. P., Oakley, D. A., ... & Dolan, R. J. (2005). Anxiety reduction through detachment: subjective, physiological, and neural effects. *Journal of cognitive neuroscience*, *17*(6), 874-883. http://doi.org/10.1162/0898929054021184

[91] Hasenkamp, W., Wilson-Mendenhall, C. D., Duncan, E., & Barsalou, L. W. (2012). Mind wandering and attention during focused meditation: A fine-grained temporal analysis of fluctuating cognitive states. *NeuroImage*, *59*(1), 750–760. http://doi.org/10.1016/j.neuroimage.2011.07.008

[92] Hasenkamp, W., & Barsalou, L. W. (2012). Effects of meditation experience on functional connectivity of distributed brain networks. *Frontiers in Human Neuroscience*, *6*. http://doi.org/10.3389/fnhum.2012.00038

[93] Baron Short, E., Kose, S., Mu, Q., Borckardt, J., Newberg, A., George, M. S., & Kozel, F. A. (2010). Regional brain activation during meditation shows time and practice effects: an exploratory FMRI study. *Evidence-Based Complementary and Alternative Medicine, 7*(1), 121-127. http://doi.org/10.1093/ecam/nem163

[94] Brefczynski-Lewis, J. A., Lutz, A., Schaefer, H. S., Levinson, D. B., & Davidson, R. J. (2007). Neural correlates of attentional expertise in long-term meditation practitioners. *Proceedings of the National Academy of Sciences*, *104*(27), 11483–11488. http://doi.org/10.1073/pnas.0606552104

[95] Lutz, A., Slagter, H. A., Dunne, J. D., & Davidson, R. J. (2008). Attention regulation and monitoring in meditation. *Trends in Cognitive Sciences*, *12*(4), 163–169. http://doi.org/10.1016/j.tics.2008.01.005

[96] Tang, Y.-Y., Lu, Q., Fan, M., Yang, Y., & Posner, M. I. (2012b). Mechanisms of white matter changes induced by meditation. *Proceedings of the National Academy of Sciences*, *109*(26), 10570–10574. http://doi.org/10.1073/pnas.1207817109

[97] Tang, Y.-Y., Hölzel, B. K., & Posner, M. I. (2015). The neuroscience of mindfulness meditation. *Nature Reviews Neuroscience*, *16*(4), 213–225. http://doi.org/10.1038/nrn3916

[98] Creswell, J. D., Way, B. M., Eisenberger, N. I., & Lieberman, M. D. (2007). Neural Correlates of Dispositional Mindfulness During Affect Labeling. *Psychosomatic Medicine*, *69*(6), 560–565. http://doi.org/10.1097/PSY.0b013e3180f6171f

[99] Gable, P., & Harmon-Jones, E. (2010). The motivational dimensional model of affect: Implications for breadth of attention, memory, and cognitive categorisation. *Cognition & Emotion*, *24*(2), 322–337. http://doi.org/10.1080/02699930903378305

[100] Kensinger, E. A., Garoff-Eaton, R. J., & Schacter, D. L. (2007). Effects of emotion on memory specificity: Memory trade-offs elicited by negative visually arousing stimuli. *Journal of Memory and Language*, *56*(4), 575–591. http://doi.org/10.1016/j.jml.2006.05.004

[101] Whalen, P. J., Bush, G., Shin, L. M., & Rauch, S. L. (2006). The emotional counting Stroop: a task for assessing emotional interference during brain imaging. *Nature protocols, 1*(1), 293. http://doi.org/10.1038/nprot.2006.45

[102] Chiesa, A., Serretti, A., & Jakobsen, J. C. (2013). Mindfulness: Top–down or bottom–up emotion regulation strategy? *Clinical Psychology Review*. http://doi.org/10.1016/j.cpr.2012.10.006

[103] Etkin, A., Egner, T., & Kalisch, R. (2011). Emotional processing in anterior cingulate and medial prefrontal cortex. *Trends in Cognitive Sciences*, *15*(2), 85–93. http://doi.org/10.1016/j.tics.2010.11.004

[104] Filevich, E., Kühn, S., & Haggard, P. (2013). There Is No Free Won't: Antecedent Brain Activity Predicts Decisions to Inhibit. PLoS ONE, 8(2), e53053. http://doi.org/10.1371/journal.pone.0053053

[105] Kim, J. (2006). *Philosophy of Mind*. Second Edition. Boulder: Westview Press.

Erklärung über die Eigenständigkeit der erbrachten wissenschaftlichen Leistung

Ich erkläre hiermit, dass ich die vorliegende Arbeit ohne unzulässige Hilfe Dritter und ohne Benutzung anderer als der angegebenen Hilfsmittel angefertigt habe. Die aus anderen Quellen direkt oder indirekt übernommenen Daten und Konzepte sind unter Angabe der Quelle gekennzeichnet.

Bei der Auswahl und Auswertung folgenden Materials haben mir die nachstehend aufgeführten Personen in der jeweils beschriebenen Weise ~~entgeltlich/~~ unentgeltlich geholfen.

Manuskript Nr. 1

Kuhr, B., Schomberg, J., Gruber, T., Quirin, M. (2013). Beyond pleasure and arousal: appetitive erotic stimuli modulate electrophysiological brain correlates of early attentional processing. NeuroReport, 24, 246-250. doi:10.1097/WNR.0b013e32835f4eba.

Die initiale Idee zur Studie kam von Benjamin Schöne (geb. Kuhr); Markus Quirin steuerte inhaltliches Feedback bei; Thomas Gruber unterstützte die Entwicklung eines EEG-Designs. Selektion des Stimulusmaterials erfolgte im Rahmen eines Studienprojektes an dem Jessica Schomberg, Rainer Düsing, Sebastian Gasse, Jakob Kaiser und Carina Krause unter Leitung von Benjamin Schöne teilnahmen. Das Stimulationsprogramm wurde von Benjamin Schöne geschrieben; alle am Studienprojekt Beteiligten führten EEG-Messungen durch. Die Datenanalyse wurde von Benjamin Schöne unter Aufsicht von Thomas Gruber durchgeführt. Das Manuskript wurde von Benjamin Schöne und Jessica Schomberg verfasst; sämtliche Abbildungen sind von Benjamin Schöne erstellt worden. Markus Quirin korrigierte das Manuskript hinsichtlich inhaltlicher Punkte; Thomas Gruber führte in die Methodik ein.

Manuskript Nr. 2

Schöne, B., Schomberg, J., Gruber, T., & Quirin, M. (2016). Event-related frontal alpha asymmetries: electrophysiological correlates of approach motivation. Experimental brain research, 234(2), 559-567.

Das Manuskript basiert auf den gleichen Daten wie Manuskript 1; es ergeben sich also die gleichen Arbeitsanteile wie beim zuvor genannten Manuskript. Manuskript und Grafiken wurden jedoch in diesem Fall allein von Benjamin Schöne unter der Supervision von Markus Quirin und Thomas Gruber erstellt. Jessica Schomberg steuerte Anmerkung zu den Entwürfen bei.

Manuskript Nr. 3

Schöne, B., Köster, M., Gruber, T., (2017) Coherence in general and personal semantic knowledge: Functional differences of the posterior and centro-parietal N400 ERP component *Accepted for resubmission in Experimental Brain Research*

Benjamin Schöne hatte die Idee zur Studie, entwickelte das Design, programmierte das Stimulationsprogram, wertete die Daten aus und verfasste das Manuskript samt Abbildungen. Moritz Köster steuerte Anmerkungen zu einer frühen Version bei; Thomas Gruber korrigierte den ersten Entwurf. Die Erstellung der Stimuli, respektive der Fotographien und die Erhebung der EEG-Daten wurde im Rahmen von Bachelorarbeiten durch Studierende unterstützt. Die Bachelorarbeiten wurden von Benjamin Schöne betreut.

Manuskript Nr. 4

Schöne B., Graetz S., Gruber T., Malinowski P., (2018), Mindfulness meditation facilitates efficiency gains in brain networks: A steady state visually evoked potentials study, *Submitted to Scientific Reports*

Idee und Design der Studie stammten von Thomas Gruber, Peter Malinowski und Benjamin Schöne. Benjamin Schöne leitete die Mediation an; Sebastian Graetz programmierte das Stimulationsprogram. Die Daten wurden im Rahmen von Abschlussarbeiten von Studierenden erhoben. Die Verhaltensdaten wertete Sebastian Graetz aus, die EEG-Daten analysierten Benjamin Schöne und Sebastian Graetz unter der Aufsicht von Thomas Gruber. Benjamin Schöne verfasste das Manuskript zusammen mit Peter Malinowski und erstellte die Abbildungen. Die Abschlussarbeiten wurden von Benjamin Schöne betreut; die Erhebung von Verhaltens- und EEG-Daten wurde maßgeblich von Martin Bernhof durchgeführt.

Manteltext der kumulativen Dissertation

Elise Radtke hat den Manteltext auf Rechtschreibung und Grammatik überprüft. Rebecca Sophia Sylvester hat bei der Nummerierung der Referenzen geholfen.

Weitere Personen waren an der inhaltlichen materiellen Erstellung der vorliegenden Arbeit nicht beteiligt. Insbesondere habe ich hierfür nicht die entgeltliche Hilfe von Vermittlungs- bzw. Beratungsdiensten (Promotionsberater oder andere Personen) in Anspruch genommen. Niemand hat von mir unmittelbar oder mittelbar geldwerte Leistungen für Arbeiten erhalten, die im Zusammenhang mit dem Inhalt der vorgelegten Dissertation stehen.

Die Arbeit wurde bisher weder im In- noch im Ausland in gleicher oder ähnlicher Form einer anderen Prüfungsbehörde vorgelegt.

....

(Ort. Datum) (Unterschrift)